INDOASIAN™
MAKES SENSE

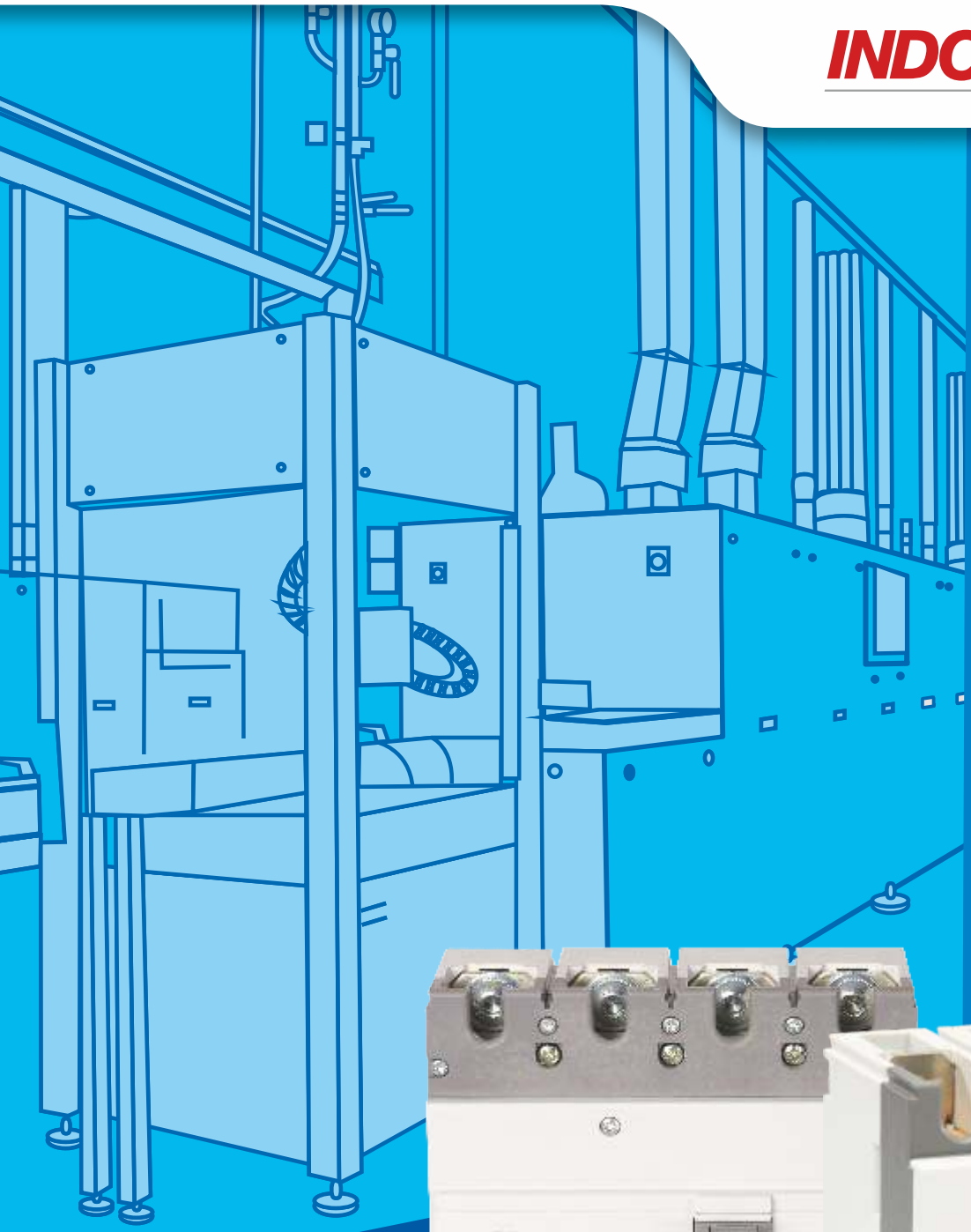

optium™

ALL THAT YOU NEED

TRUST.
SAFETY.
DURABILITY.

As electrical control and safety has become a basic necessity these days, Indo Asian has always stressed on providing innovative and high quality products to meet customer demand. With breakthrough products backed by motivation and insight, Indo Asian has risen to be a lead player in the field of Low Voltage Switchgear products.

Indo Asian range of Optium Series, a new generation of MCCBs, stands out due to its state-of-the-art design, contemporary user friendly features, ergonomics, aesthetics and compactness.

The range is specially designed for tropical conditions, ensuring reliable performance at high ambient and humid environments. The range can satisfy the most demanding system requirements.

The Optium Series, having a wide range of accessories, ensures operational safety, reliability and versatility

Content

MCCB - Product Range..... 02-03

MCCB - Product Specifaction..... 03-09

Technical Characteristics - MCCB..... 10-23

Technical Table..... 24-29

Dimensional Drawings..... 30-34

Catalogue pages..... 35-45

optium™

ALL THAT YOU NEED

optium™

ALL THAT YOU NEED

Adjustable, compact and ease of installation are just some of the features of our wide range of MCCBs.

F1

F2

F4

INDOASIAN™
MAKES SENSE

F3

F5

Nomenclature

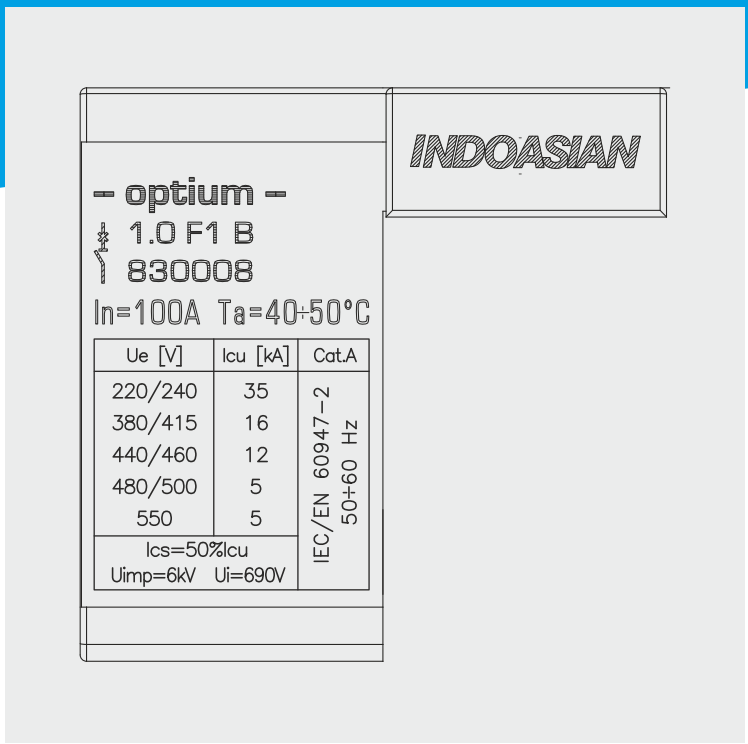

Example >> Optium 1.0 F1 B 100A

Optium □ □ □ □

Rating(In)
Form 16A to 1250A

Breaking Capacity (Icu@415V)
E=10kA, B=16kA, L=25kA, M=36kA & H=50kA

Frame Code
F1= 125, F2=250, F3=250HP, F4=630 & F5=1250

Release Code
1.0=TM Fixed,
1.1= TM Fixed(Is=Iw)2.0= TMI adj,
2.1=Elec. LS & 2.2=Elec.LSG

Design Model of MCCB

Adjustable settings

F1 & F2

F3

ONLY ADJ VERSION
THERMAL
REGULATION

$I_r = (0{,}8 \div 1) \times I_n$

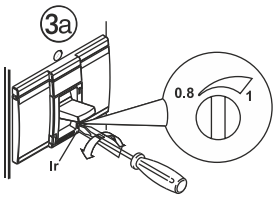

ONLY ADJ VERSION
THERMAL & MAGNETIC
REGULATION

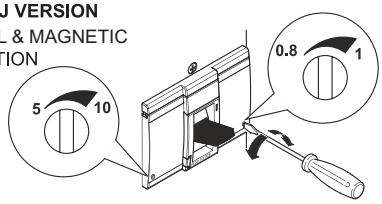

Ir = (0,8÷1) × In
Isd = (5 ÷10) × In

F4

Only Electronic Version (LS)-S2
830510...830517

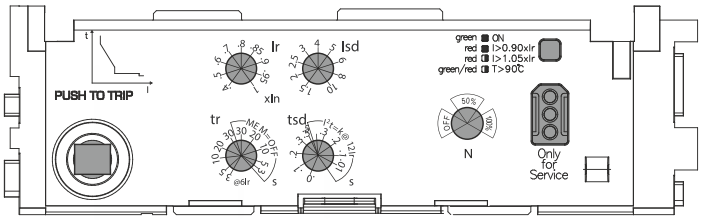

Only Electronic Version (LSG)-SG
830520...830527

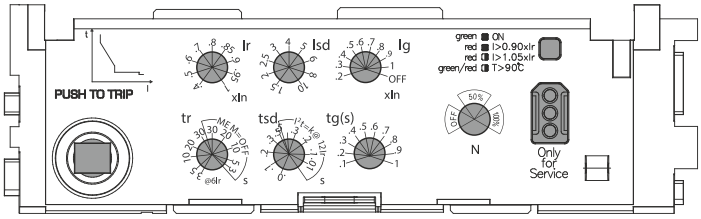

optium™
ALL THAT YOU NEED

F5

Only Electronic Version (LS)-S2
830540...830547

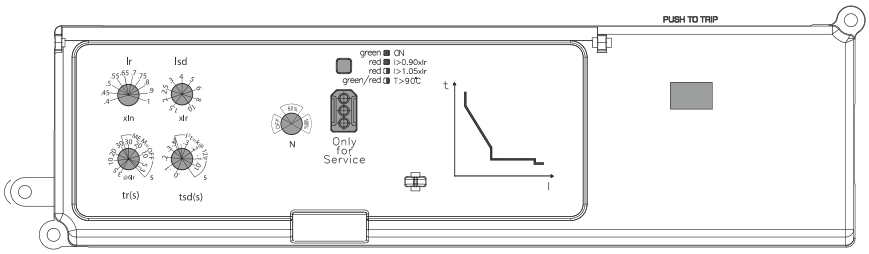

Only Electronic Version (LSG)-Sg
830550...830557

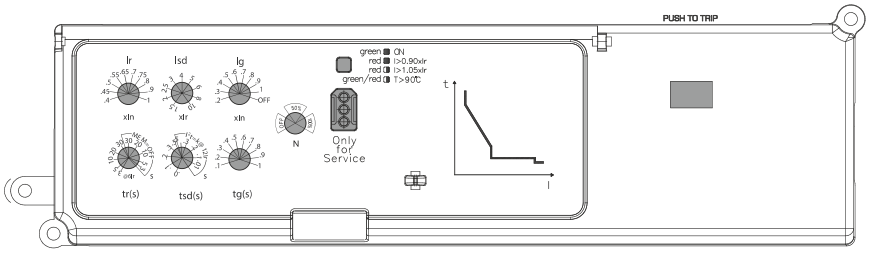

Fixed range Ics=50% Icu		
ICS		ICU
10 kA		5 kA
16 kA	=	8 kA
25 kA		12.5 kA
36 kA		18 kA
50 kA		25 kA

Fixed range Ics=100% Icu		
ICU		ICS
16 kA		16 kA
25 kA	=	25 kA

Adjustable range Ics=100% Icu		
ICU		ICS
16 kA		16 kA
25 kA	=	25 kA
36 kA		36 kA
50 kA		50 kA

Line load reversibility

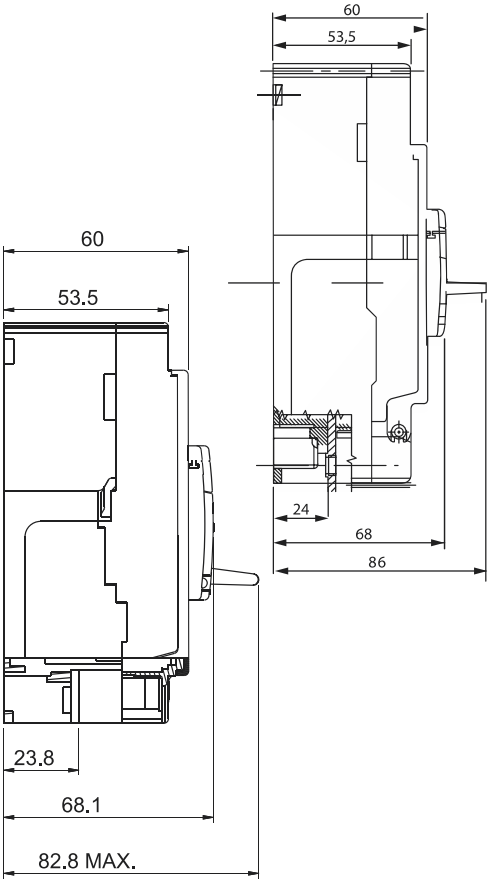

Compact sizes

Frame 1 & 2 is compact and suitable for installation in DB

optium™
ALL THAT YOU NEED

Wide choice of electrical accessories

Aux contact

Shunt trip

Undervoltage

Easy-to-install accessories

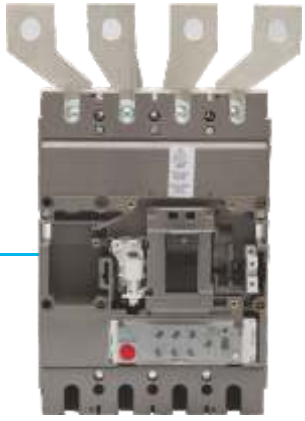

Accessories

Phase Separator

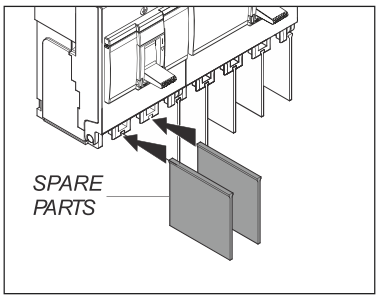

Padlock - Off Position

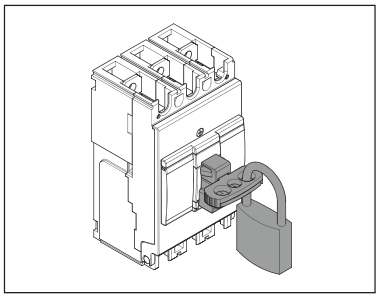

Cage Terminals

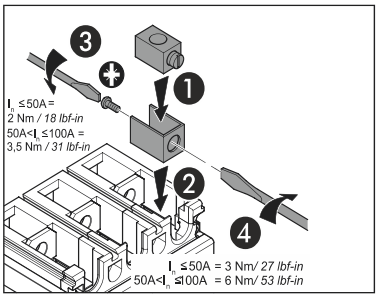

Terminal Shield

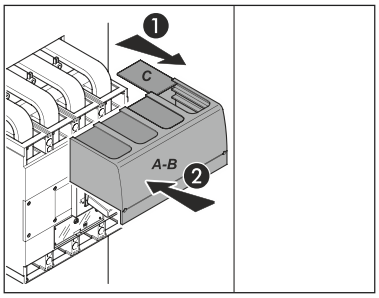

Terminal Cover

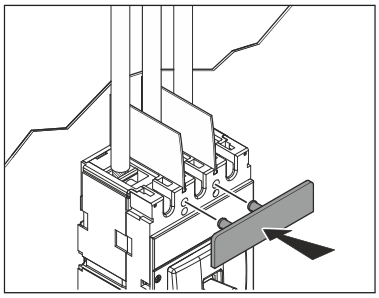

Spreader Link

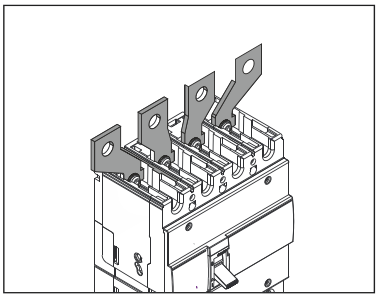

Rotary Handle

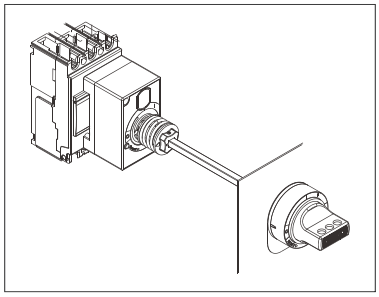

Technical Characteristics - MCCB

Time current characteristics

Time current tripping characteristics at ambient temperature 40° C

Frame 1 - In (16A - 125A)

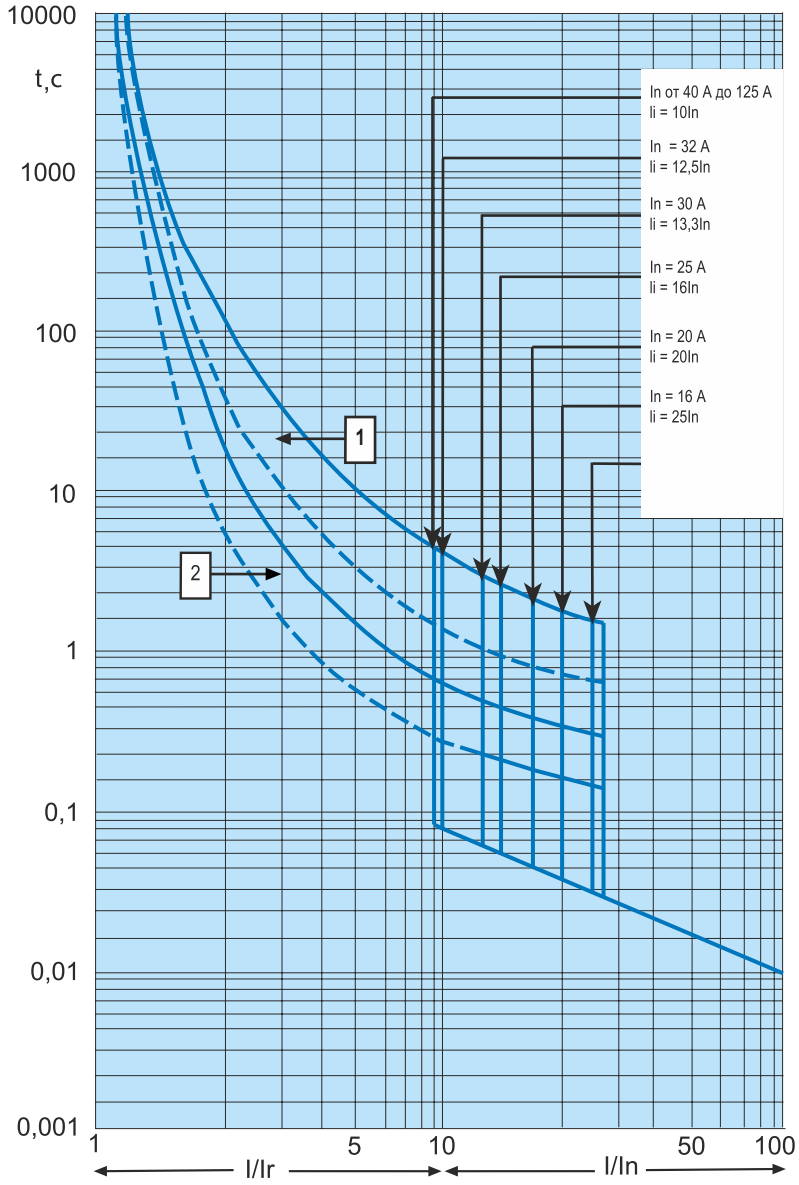

The multiplicity of the load current to the rated current of the circuit breaker

I - load current ;
Ir - the maximum value of the current setpoint thermal release . Current Rating You are a breaker is determined by the rated current thermal release ;
1 - area of work from the "cold" state thermal release
2 - working area of the "hot" state TE Pilaf release (in working condition)

Technical Characteristics - MCCB

Data limitations of current

Frame 1 - In (16A - 125A)

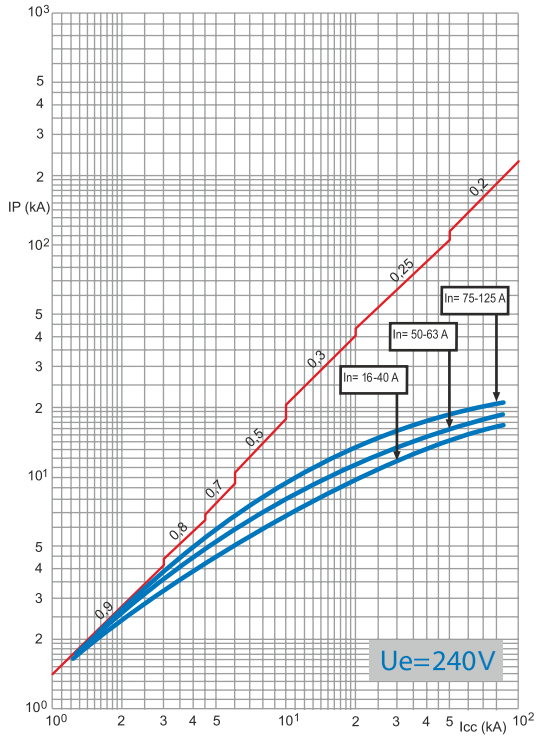

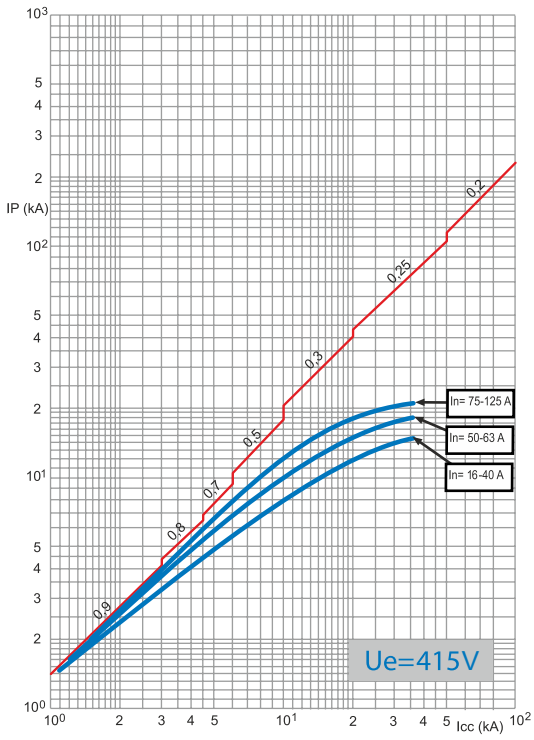

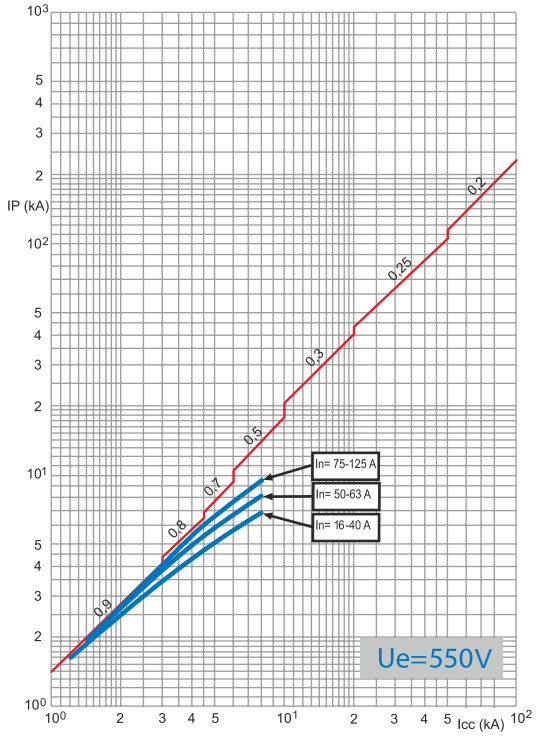

Limitation of shock value Short- current contiguity (actual maximum value) in the Depending on the current value of the expected direct fault current

optium™ ALL THAT YOU NEED

Technical Characteristics - MCCB

Limitations of energy curves

Frame 1 - In (16A - 125A)

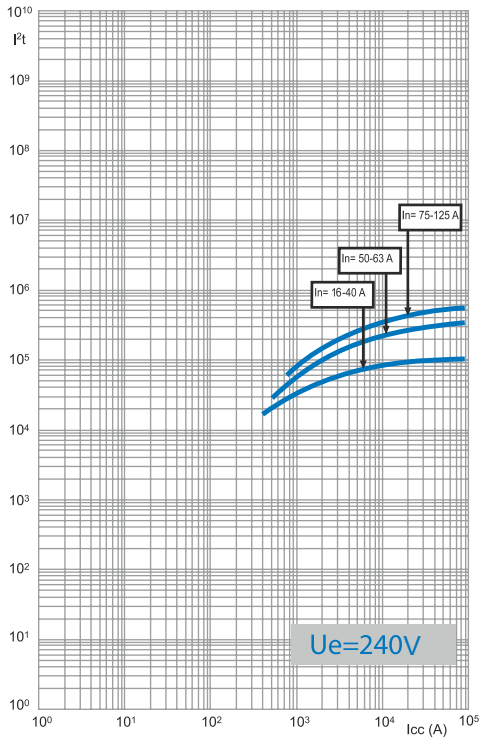

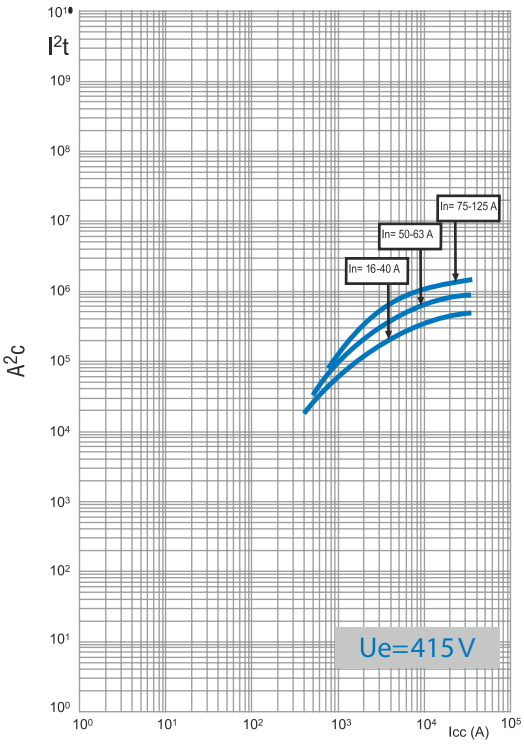

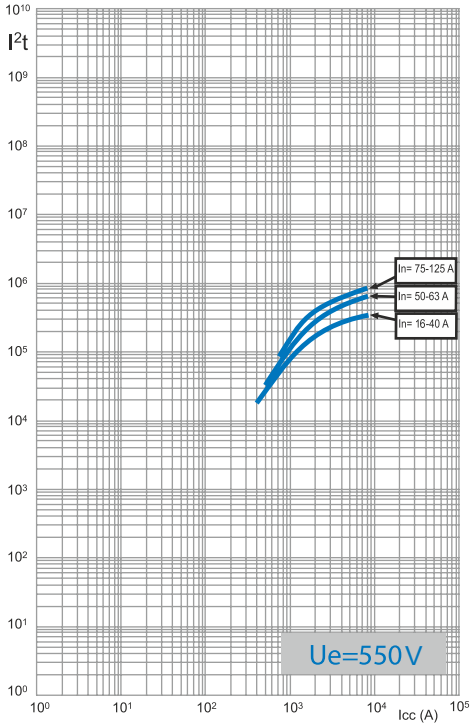

Specific heat (A2s) , ie energy,
released during a short circuit in the conduction
arrestor 1-ohm , depending
from the rms value of the prospective current
short circuit

Technical Characteristics - MCCB

Time current characteristics

Frame 2 - In (160A - 250A)

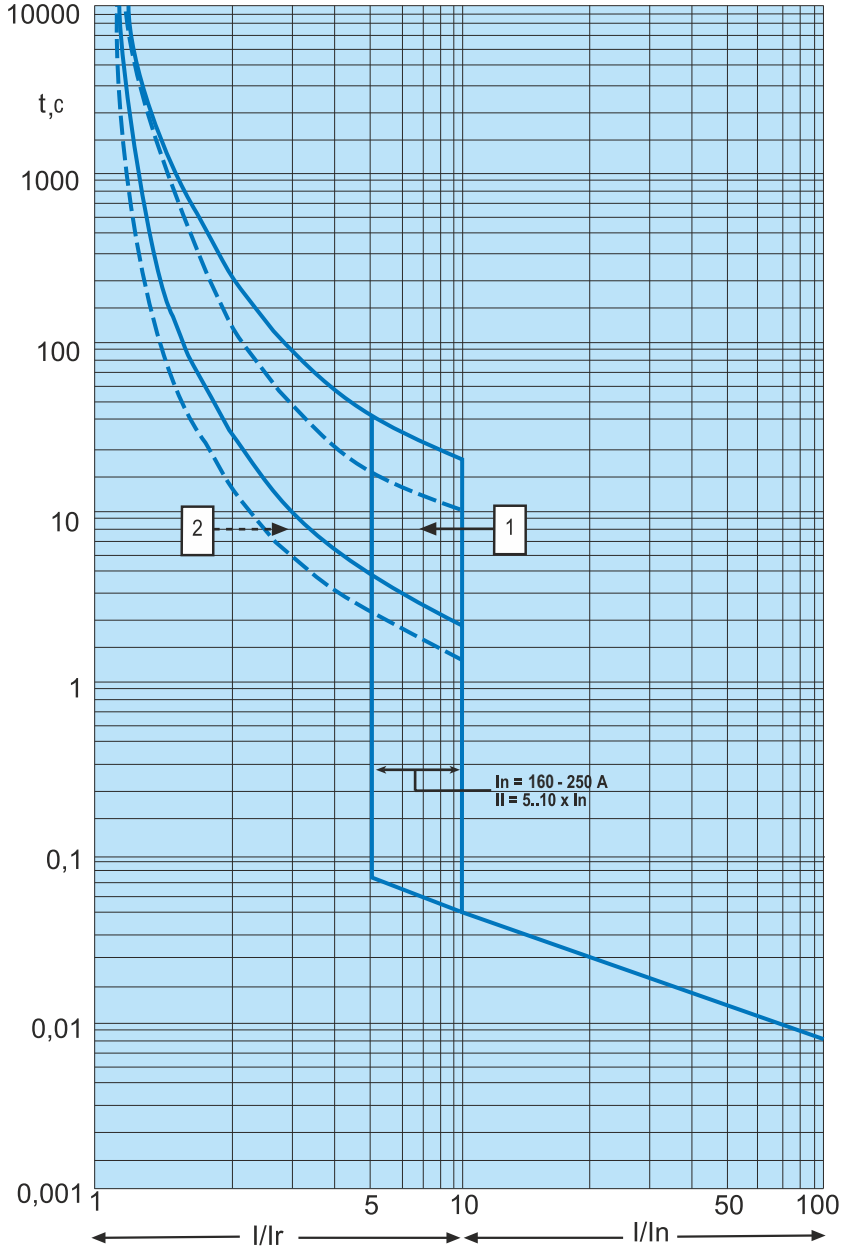

I - load current ;
Ir - the maximum value of the current setpoint thermal release . Rated current breaker depends on the bench current heat release ;
1 - area of work from the "cold" state thermal release
2 - working area of the "hot" state TE Pilaf release (in working condition)

The multiplicity of the load current to the rated current of the circuit breaker

optium™
ALL THAT YOU NEED

Technical Characteristics - MCCB

Data limitations of current

Frame 2 - In (160A - 250A)

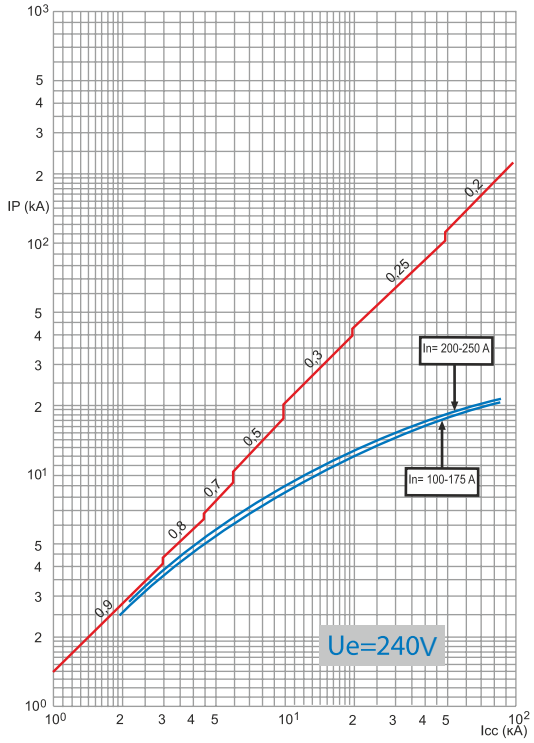

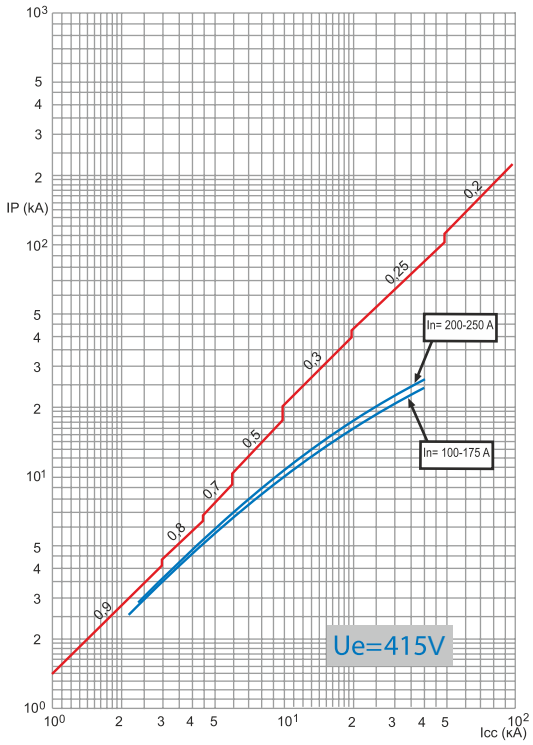

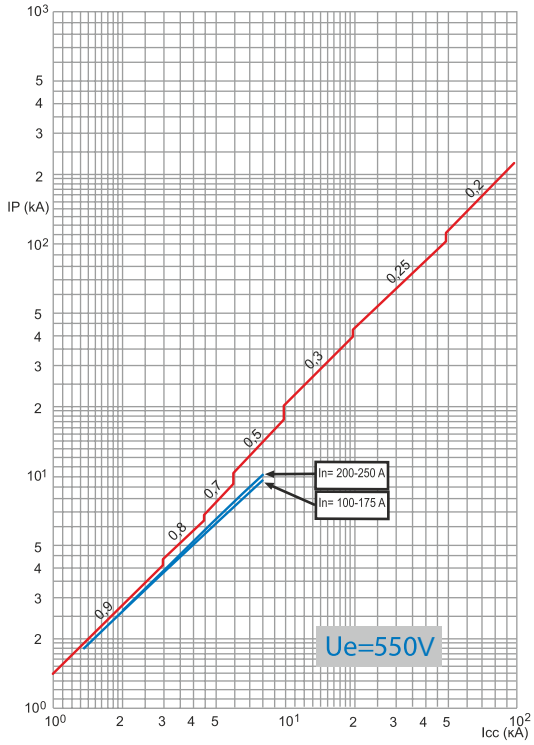

Limited impact the value of a short current circuit (the actual maximum value of) depending on the current values of expected short-circuit current

Technical Characteristics - MCCB

Limitations of energy curves

Frame 2 - In (160A - 250A)

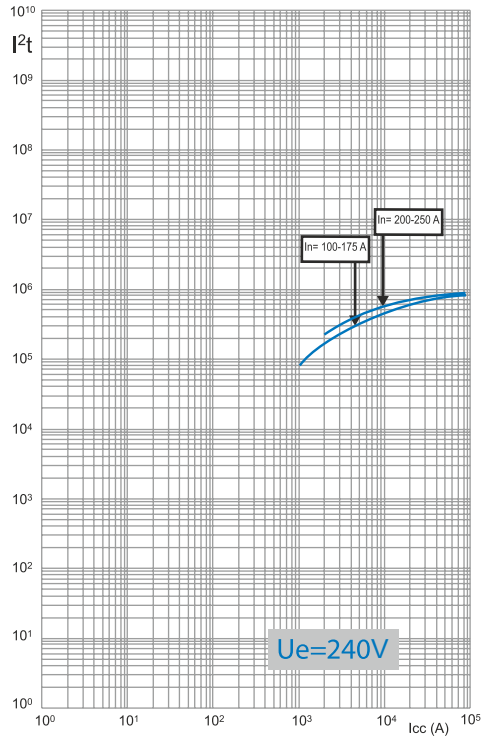

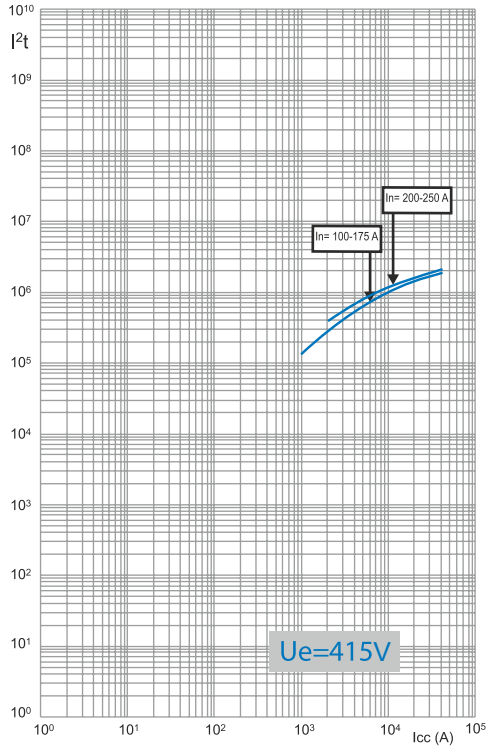

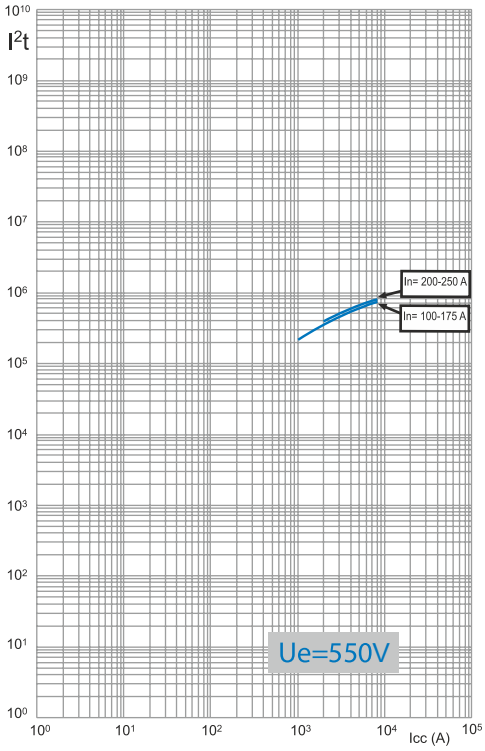

Specific heat (A2s) , ie energy,
released during a short circuit in the conduction
arrestor 1-ohm , depending
from the rms value of the prospective current
short circuit

optium™
ALL THAT YOU NEED

Technical Characteristics - MCCB

Time current characteristics

Frame 3 - In (16A to 250A)

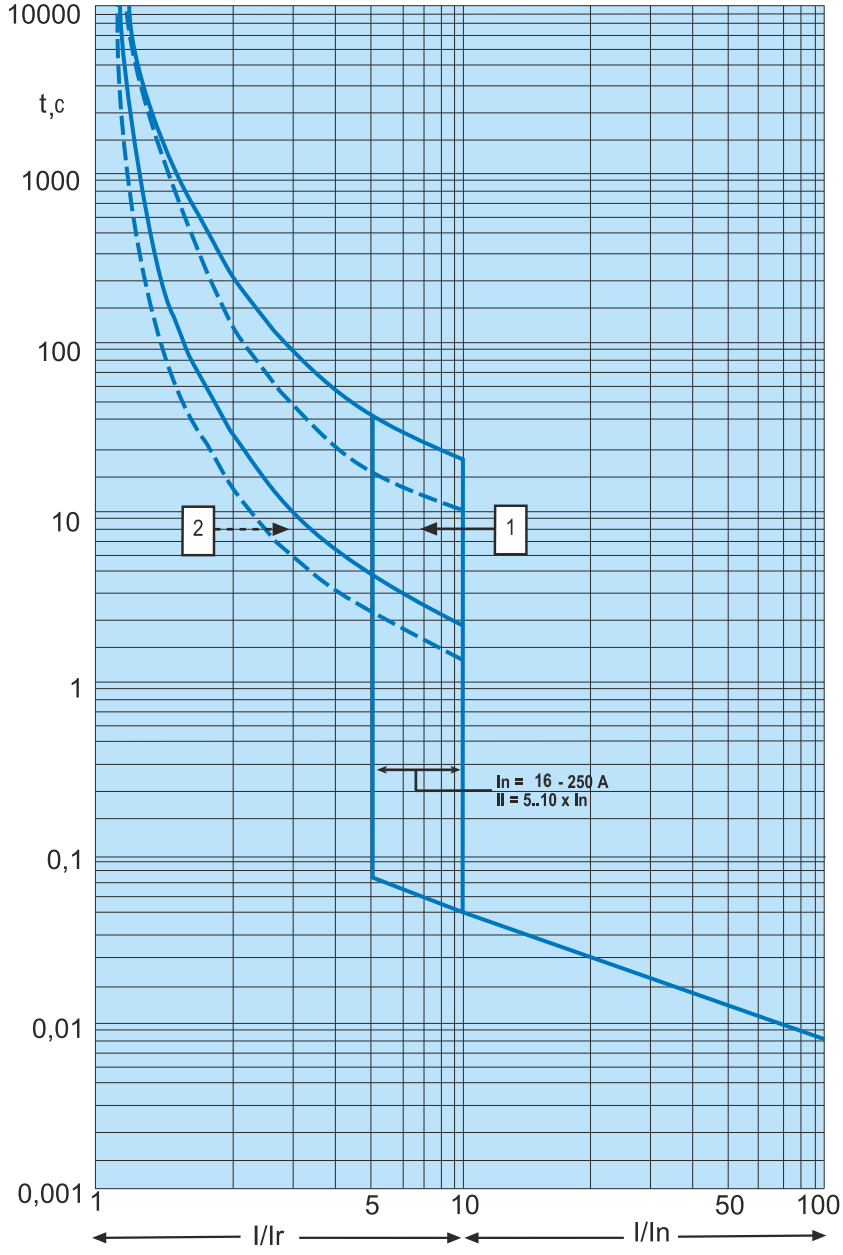

I - load current ;
Ir - the maximum value of the current setpoint thermal release . Rated current breaker depends on the bench current heat release ;
1 - area of work from the "cold" state thermal release
2 - working area of the "hot" state TE Pilaf release (in working condition)

The multiplicity of the load current to the rated current of the circuit breaker

Technical Characteristics - MCCB

Data limitations of current

Frame 3 - In (16A to 250A)

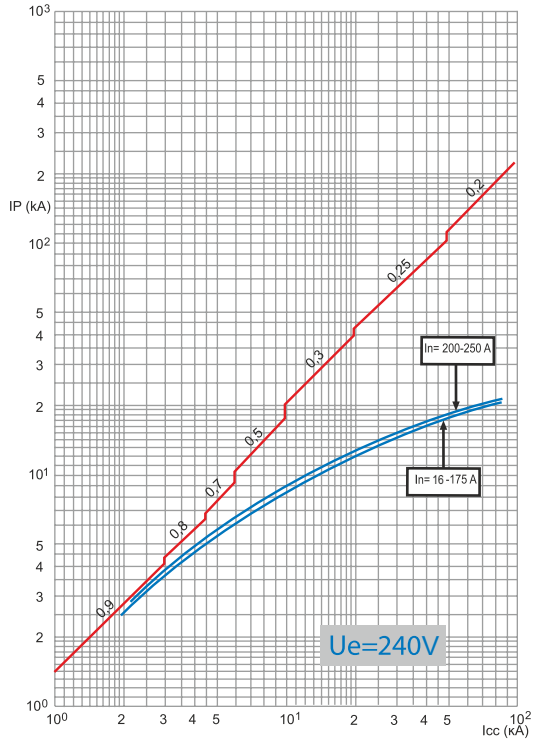

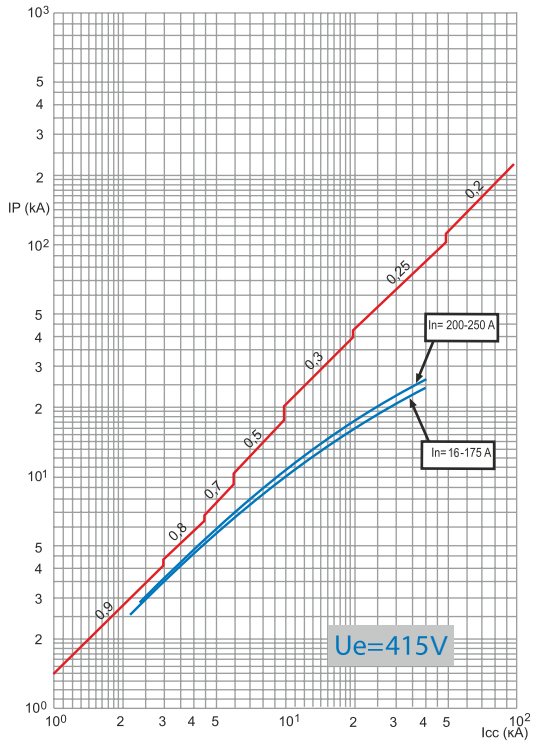

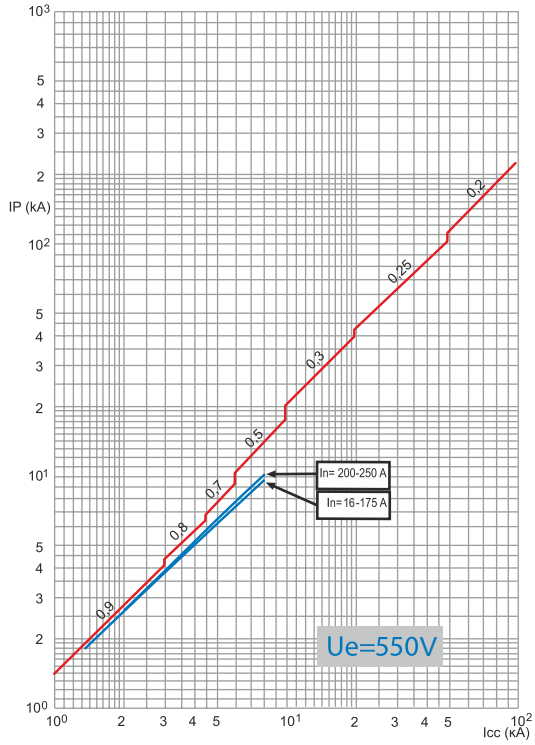

Limited impact the value of a short current circuit (the actual maximum value of) depending on the current values of expected short-circuit current

optium™ ALL THAT YOU NEED

Technical Characteristics - MCCB

Limitations of energy curves

Frame 3 - In (16A to 250A)

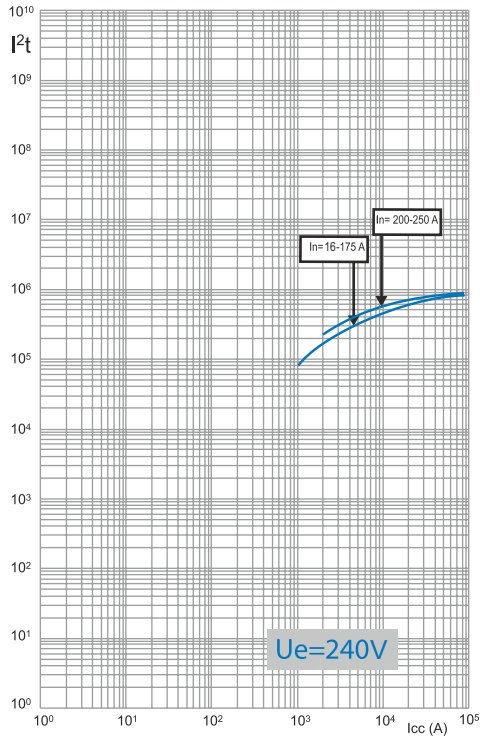

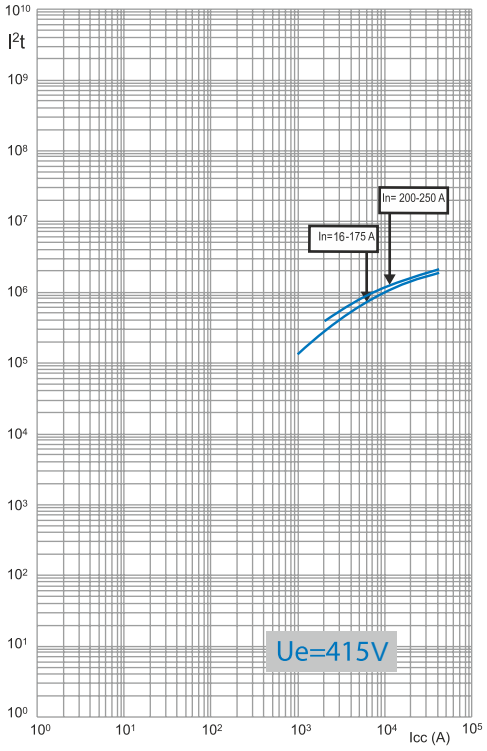

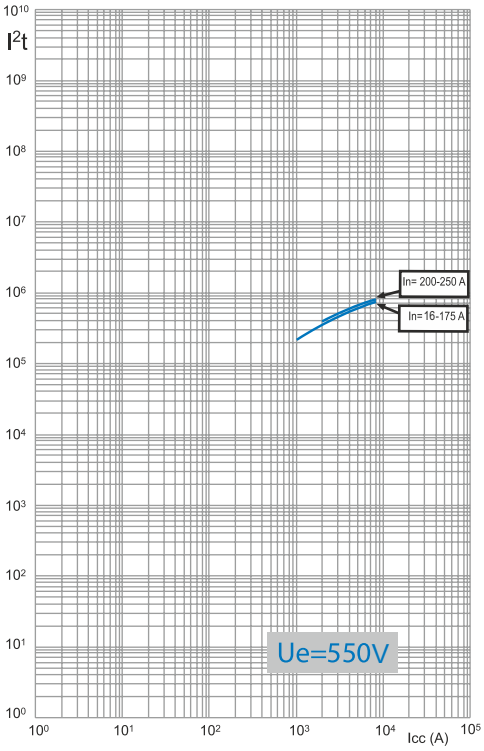

Specific heat (A2s) , ie energy,
released during a short circuit in the conduction
arrestor 1-ohm , depending
from the rms value of the prospective current
short circuit

Technical Characteristics - MCCB

Frame 4 - In (315A - 630A)

Performance data for Frame F4

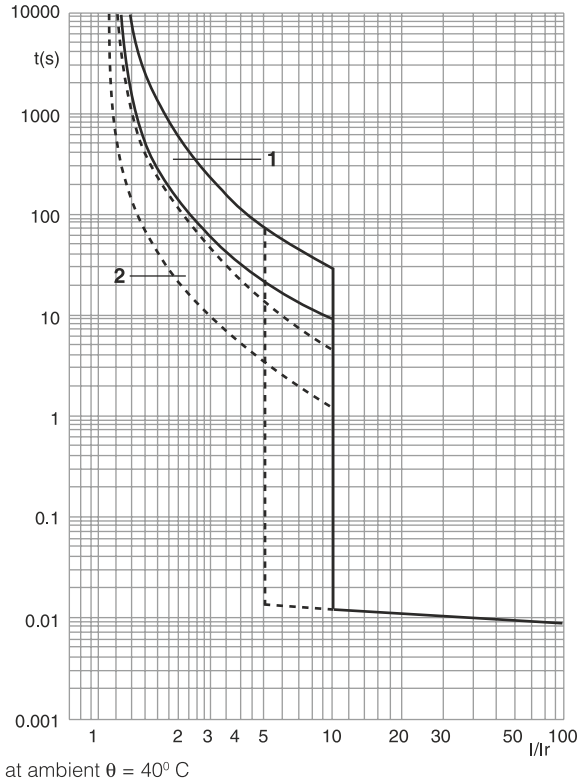

at ambient θ = 40° C
I = actual current
Ir = max. adjustment current of thermal release
1 = thermal release zone when cold
2 = thermal release zone when hot (in steady state)

Current limitation curves

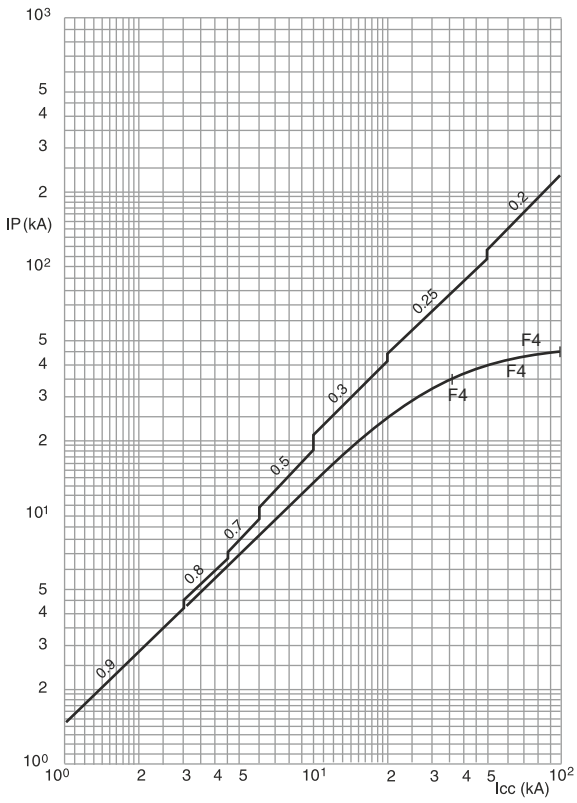

Icc = prospective short-circuit symmetrical current (rms value in kA)
IP = maximum peak value (in kA)

optium™
ALL THAT YOU NEED

Technical Characteristics - MCCB

Frame 4 - In (315A - 630A)

Performance data for Frame F4 (S_2)

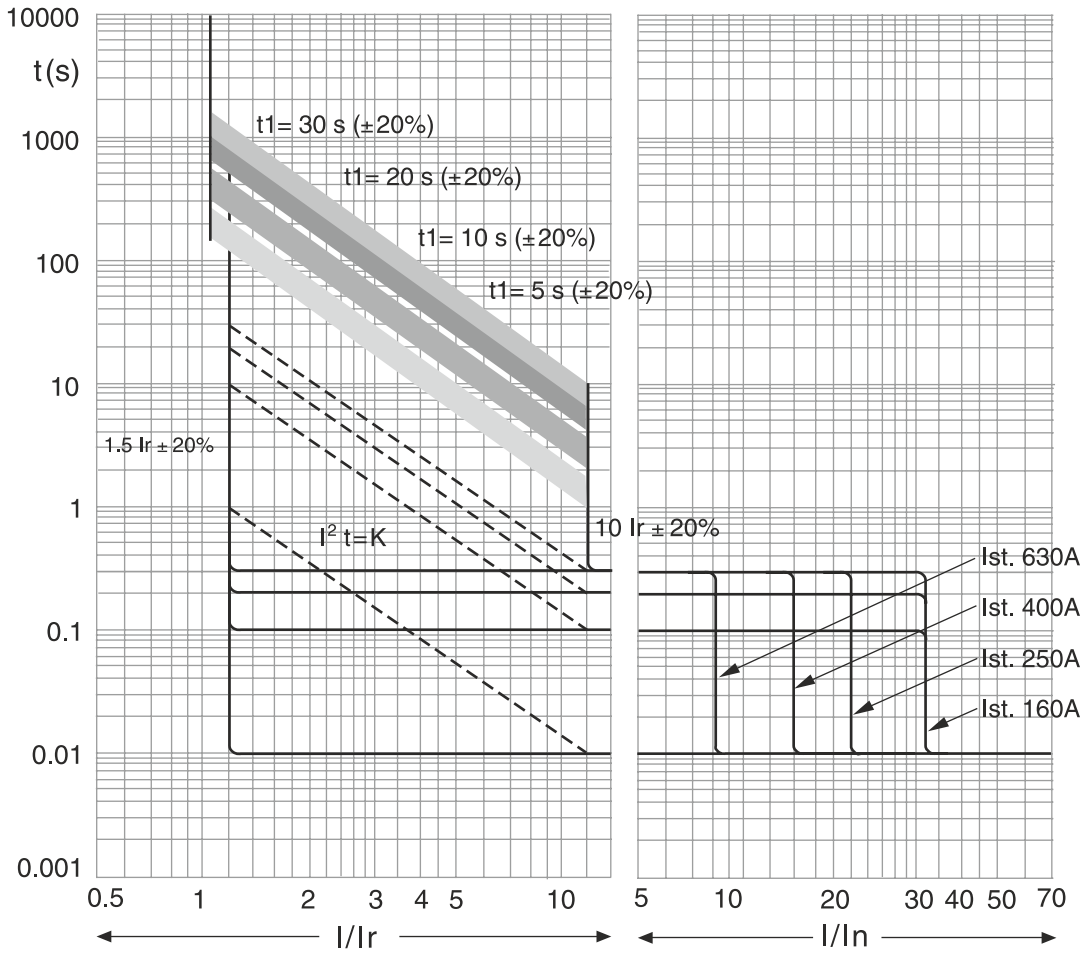

in = nominal current
I = actual current
Ir = max. adjustment current of thermal release

Technical Characteristics - MCCB

Frame 4 - In (315A - 630A)

Performance data (earth fault) Sg

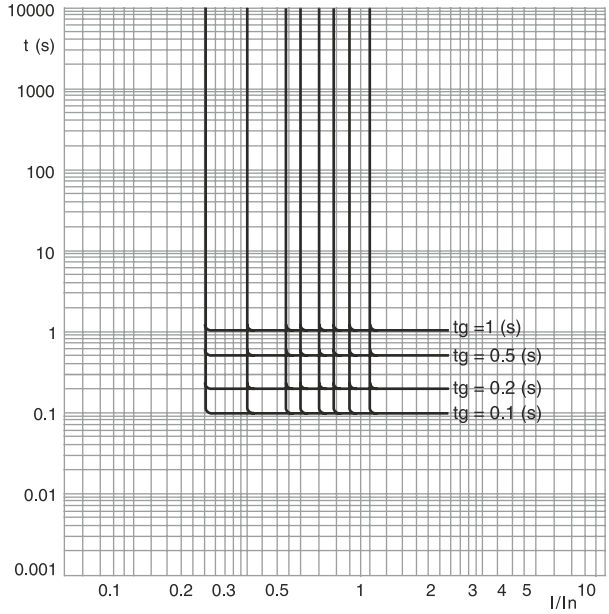

I = actual current / In = nominal current

Thermal stress limitation curves

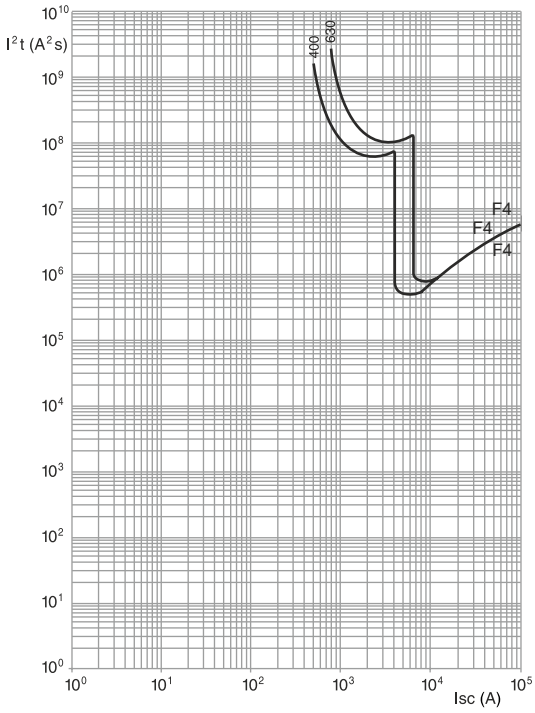

Isc = prospective short-circuit symmetrical current (rms value in A)
I^2t = limited thermal stress (in A^2s)

optium™
ALL THAT YOU NEED

Technical Characteristics - MCCB

Frame 5 - In (800A - 1250A)

Performance data for Frame F5

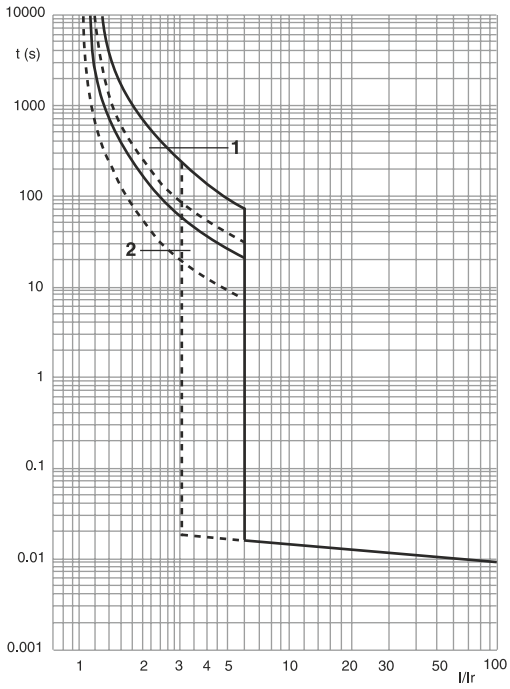

at ambient θ = 40° C
I = actual current / Ir = max. adjustment current of thermal release
1 = thermal release zone when cold
2 = thermal release zone when hot (in steady state)

Current limitation curves

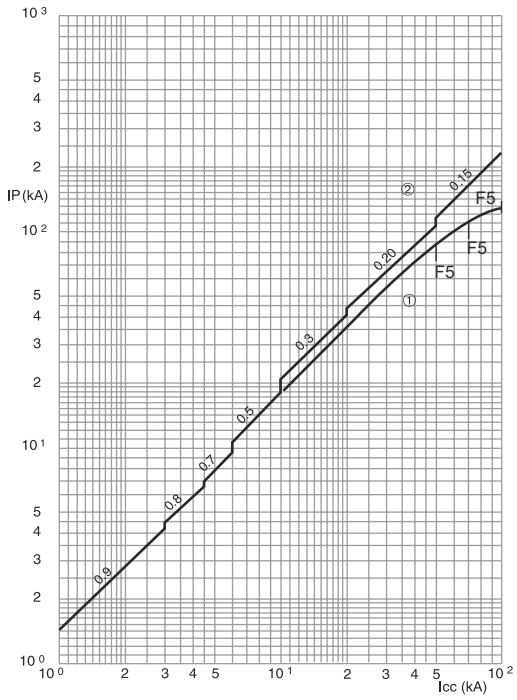

at ambient θ = 40° C
I = actual current
Ir = max. adjustment current of thermal release
1 = thermal release zone when cold
2 = thermal release zone when hot (in steady state)

Technical Characteristics - MCCB

Frame 5 - In (800A - 1250A)

Thermal stress limitation curves

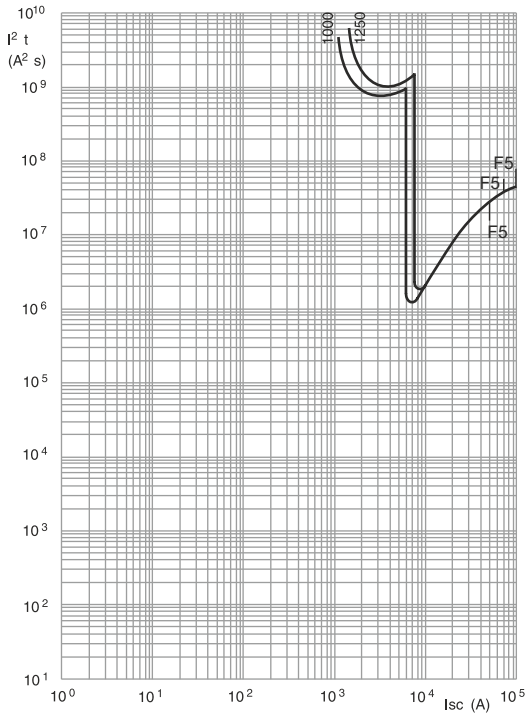

Icc = prospective short-circuit symmetrical current (rms value in A)
I^2t = limited thermal stress (in A^2s)

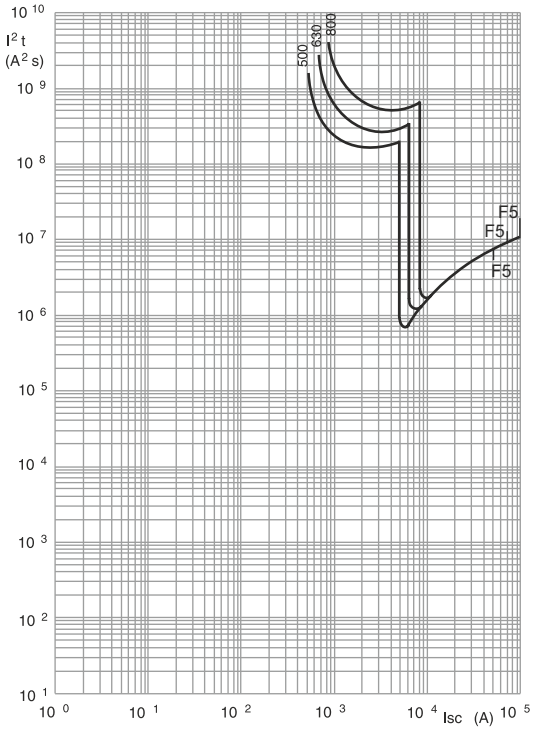

optium™
ALL THAT YOU NEED

Technical Table

Devices	Optium 1.0 F1									Optium 1.0 F2		
Mounting	On plate											
Breaking capacity (ICU)												
380/415V	10kA	16kA	25kA				36kA			16kA	25kA	36kA
220/240V												
Service Breaking Capacity (Ics)	50%	50%	50%				50%			50%	50%	50%
Characteristics of use												
Nominal frequency	50Hz									50Hz		
Maximum rated operating voltage	Upto 550 V									Upto 550 V		
Category of use	A									A		
Thermal magnetic adjustment												
Thermal	FIXED (1xIn)									FIXED (1xIn)		
Magnetic	FIXED (Inx10)									FIXED (Inx10)		
Electronic protection adjustment	—									—		
Maximum cable cross-section												
Rigid cable	2.5 to 16 mm^2					10 to 50 mm^2			35 to 50 mm^2	35 to 150 mm^2		
Flexible cable	2.5 to 10 mm^2					10 to 50 mm^2			35 to 50 mm^2	35 to 120 mm^2		
Copper bar and lug width	17mm					17mm			17mm	25mm		
Tightening torque	3 Nm					6 Nm			6 Nm	13 Nm		
Nominal current at 40 degree												
In (A)	16	25	32	40	50	63	80	100	125	160	200	250
Phase	16	25	32	40	50	63	80	100	125	160	200	250
N	16	25	32	40	50	63	80	100	125	160	200	250
Magnetic threshold	Fixed									Fixed		
In (A)	16	25	32	40	50	63	80	100	125	160	200	250
Phase	160	250	320	400	500	630	800	1000	1250	1600	2000	2500
N	160	250	320	400	500	630	800	1000	1250	1600	2000	2500
Endurance												
Electrical	1500	8000							1000	8000		
Mechanical	8000	25000							7000	25000		

Technical Table

Devices	Optium 1.0 F3													Optium 1.0 F4				Optium 1.0 F5
Mounting	On plate													On plate				On plate
Breaking capacity																		
380/415V	50kA													36kA		50kA		50kA
220/240V																		
Breaking capacity %Icu	50%													50%		50%		50%
Characteristics of use																		
Nominal frequency	50Hz													50Hz				50Hz
Maximum rated operating voltage	Upto 550 V													Upto 550 V				Upto 550 V
Category of use	A													A				A
Thermal magnetic adjustment																		
Thermal	FIXED													FIXED				FIXED
Magnetic	FIXED (10 In)													FIXED (10 In)				FIXED (10 In)
Electronic protection adjustment	——													——				——
Maximum cable cross-section																		
Rigid cable	2.5 to 150 mm^2													300 mm^2 or 2 x 240 mm^2				2 or 4 x 240 mm^2
Flexible cable	2.5 to 120 mm^2													240 mm^2 or 2 x 185 mm^2				2 or 4 x 185 mm^2
Copper bar and lug width														25 mm				50 mm
Tightening torque	7 Nm10 Nm													15 Nm				20Nm
Nominal current at 40 degree																		
In (A)	16	20	25	32	40	50	63	80	100	125	160	200	250	315 to 630 A				800 A
Phase	16	20	25	32	40	50	63	80	100	125	160	200	250	315	400	500	630	800
N	16	20	25	32	40	50	63	80	100	125	160	200	250	315	400	500	630	800
Magnetic threshold	Fixed (10 In)													Fixed (10 In)				Fixed (10 In)
In (A)	16	20	25	32	40	50	63	80	100	125	160	200	250	315	400	500	630	800
Phase	160	200	250	320	400	500	630	800	1000	1250	1600	2000	2500	3150	4000	5000	6300	8000
N	160	200	250	320	400	500	630	800	1000	1250	1600	2000	2500	3150	4000	5000	6300	8000
Endurance																		
Electrical	8000													8000				8000
Mechanical	25000													25000				10000

Technical Table

Devices	Optium 1.1 F1							Optium 1.1 F2		
Mounting	On plate							On plate		
Breaking capacity										
380/415V	16kA	25kA						16kA	25kA	
220/240V										
Breaking capacity %Icu	100%	100%						100%	100%	
Characteristics of use										
Nominal frequency	50Hz	50Hz						50Hz		
Maximum rated operating voltage	Upto 550 V	Upto 550 V						Upto 550 V		
Category of use	A	A						A		
Thermal magnetic adjustment										
Thermal	FIXED (1xIn)	FIXED (1xIn)						FIXED (1xIn)		
Magnetic	FIXED (10XIn)	FIXED (10XIn)						FIXED (10XIn)		
Electronic protection adjustment	—	—						—		
Maximum cable cross-section										
Rigid cable	2.5 to 16 mm^2	2.5 to 16 mm^2	10 to 50 mm^2				35 to 50 mm^2	35 to 150 mm^2		
Flexible cable	2.5 to 10 mm^2	2.5 to 10 mm^2	10 to 50 mm^2				35 to 50 mm^2	35 to 120 mm^2		
Copper bar and lug width	17mm	17mm	17mm				17mm	25mm		
Tightening torque	3 Nm	3 Nm	6 Nm				6 Nm	13 Nm		
Nominal current at 40 degree										
In (A)	32	40	50	63	80	100	125	160	200	250
Phase	32	40	50	63	80	100	125	160	200	250
N	32	40	50	63	80	100	125	160	200	250
Magnetic threshold	Fixed	Fixed						Fixed		
In (A)	32	40	50	63	80	100	125	160	200	250
Phase	320	400	500	630	800	1000	1250	1600	2000	2500
N	320	400	500	630	800	1000	1250	1600	2000	2500
Endurance										
Electrical	8000	8000					1000	8000		
Mechanical	25000	25000					7000	25000		

Technical Table

Devices	Optium 2.0 F1											Optium 2.0 F2		
Mounting	On plate											On plate		
Breaking capacity														
380/415V	16kA					25kA						16kA	25kA	
220/240V														
Breaking capacity %Icu	100%					100%						100%	100%	
Characteristics of use														
Nominal frequency	50Hz											50Hz		
Maximum rated operating voltage	Upto 550 V											Upto 550 V		
Category of use	A											A		
Thermal magnetic adjustment														
Thermal	0.8 to 1 In											0.8 to 1 In		
Magnetic	FIXED (10 In)											FIXED (10 In)		
Electronic protection adjustment	—											—		
Maximum cable cross-section														
Rigid cable	2.5 to 16 mm^2					10 to 50 mm^2				35 to 50 mm^2		35 to 150 mm^2		
Flexible cable	2.5 to 10 mm^2					10 to 35 mm^2				35 to 50 mm^2		35 to 120 mm^2		
Copper bar and lug width	17mm					17 mm				17 mm		25 mm		
Tightening torque	3 Nm					6 Nm				6 Nm		13 Nm		
Nominal current at 40 degree														
In (A)	25 to 125A											160 to 250 A		
Phase	25	32	40	50	63	80	100	125				160	200	250
N	25	32	40	50	63	80	100	125				160	200	250
Magnetic threshold	Fixed (10 In)											Fixed (10 In)		
In (A)	25	32	40	50	63	80	100	125				160	200	250
Phase	250	320	400	500	630	800	1000	1250				1600	2000	2500
N	250	320	400	500	630	800	1000	1250				1600	2000	2500
Endurance														
Electrical	8000											8000		
Mechanical	25000											25000		

Technical Table

Devices	Optium 2.0 F3		Optium 2.0 F4			Optium 2.0 F5	
Mounting	On plate		On plate			On plate	
Breaking capacity							
380/415V	36kA	50kA	25kA	36kA	50kA	36kA	50kA
220/240V							
Breaking capacity %Icu	100%	100%	100%	100%	100%	100%	100%
Characteristics of use							
Nominal frequency	50Hz		50Hz			50Hz	
Maximum rated operating voltage	Upto 550 V		Upto 550 V			Upto 550 V	
Category of use	A		A			A	
Thermal magnetic adjustment							
Thermal	0.8 to 1 In		0.8 to 1 In			0.8 to 1 In	
Magnetic	5 to 10 In		5 to 10 In			5 to 10 In	
Electronic protection adjustment	—		—			—	
Maximum cable cross-section							
Rigid cable	2.5 to 150 mm^2		300 mm^2 or 2 x 240 mm^2			2 or 4 x 240 mm^2	
Flexible cable	2.5 to 120 mm^2		240 mm^2 or 2 x 185 mm^2			2 or 4 x 185 mm^2	
Copper bar and lug width	25 mm		32 mm			50 mm	
Tightening torque	7 nm / 10 nm		15 Nm			20 Nm	
Nominal current at 40 degree							
In (A)	Refer same as Optium 1.0 F3		315 to 630 A			800 to 1250A	
Phase			315	400	500	630	800	1000	1250
N			315	400	500	630	800	1000	1250
Magnetic threshold	Adjustable		Adjustable			Adjustable	
In (A)							
Phase	As Per Rating		As Per Rating			As Per Rating	
N							
Endurance							
Electrical	8000		8000			4000	
Mechanical	25000		25000			10000	

Technical Table

Devices	Optium 2.1 F3		Optium 2.1 F4		Optium 2.1 F5		Optium 2.2 F3		Optium 2.2 F4		Optium 2.2 F5	
Mounting	On plate		On plate		On plate		On plate		On plate		On plate	
Breaking capacity												
380/415V	36kA	50kA	36kA	50kA	36kA	50kA	36kA	50kA	36kA	50kA	36kA	50kA
220/240V												
Breaking capacity %Icu	100%	100%	100%	100%	100%	100%	100%	100%	100%	100%	100%	100%
Characteristics of use												
Nominal frequency	50Hz		50Hz		50Hz		50Hz		50Hz		50Hz	
Maximum rated operating voltage	Upto 550 V		Upto 550 V		Upto 550 V		Upto 550 V		Upto 550 V		Upto 550 V	
Category of use	A		A:In 630A-B:In 200 to 400A		B		A		A:In 630A-B:In 200 to 400A		B	
Thermal magnetic adjustment												
Thermal	—		—		—		—		—		—	
Magnetic												
Electronic protection adjustment	Ir : 0,4 to 1 In Isd : 1,5 to 10 Ir		Ir = 0.4 - 1 x In tr = 3-30 s Isd = 1.5 - 10 Ir tsd (I=K) = 0-500 ms tsd(I2t=K) = 0-500 ms		Ir = 0.4 - 1 x In tr = 3-30 s Isd = 1.5 - 10 Ir tsd (I=K) = 0-500 ms tsd(I2t=K) = 0-500 ms		Ir : 0,4 to 1 In Isd : 1,5 to 10 Ir		Ir = 0.4 - 1 x In tr = 3-30 s Isd = 1.5 - 10 Ir tsd (I=K) = 0-500 ms tsd(I2t=K) = 0-500 ms Ig = 0.2 - 1 x In tg = 0.1 - 1 s		Ir = 0.4 - 1 x In tr = 3-30 s Isd = 1.5 - 10 Ir tsd (I=K) = 0-500 ms tsd(I2t=K) = 0-500 ms Ig = 0.2 - 1 x In tg = 0.1 - 1 s"	
Maximum cable cross-section												
Rigid cable	2.5 to 150 mm^2		300 mm^2 or 2 x 240 mm^2		2 or 4 x 240 mm^2		2.5 to 150 mm^2		300 mm^2 or 2 x 240 mm^2		2 or 4 x 240 mm^2	
Flexible cable	2.5 to 120 mm^2		240 mm^2 or 2 x 185 mm^2		2 or 4 x 185 mm^2		2.5 to 120 mm^2		240 mm^2 or 2 x 185 mm^2		2 or 4 x 185 mm^2	
Copper bar and lug width	25 mm		32 mm		50 mm		25 mm		32 mm		50 mm	
Tightening torque	7Nm /10 Nm		15 Nm		20 Nm		7Nm /10 Nm		15 Nm		20 Nm	
Nominal current at 40 degree												
In (A)	40A,100A,		400 to 630 A		800 to 1250 A		40A,100A,		400 to 630 A		800 to 1250 A	
Phase	160A, 250A		400 to 630 A		800 to 1250 A		160A, 250A		400 to 630 A		800 to 1250 A	
N			0-50-100% of phase value		0-50-100% of phase value				0-50-100% of phase value		0-50-100% of phase value	
Magnetic threshold												
In (A)	—		—		—		—		—		—	
Phase												
N												
Endurance												
Electrical	8000		5000		4000		8000		5000		4000	
Mechanical	25000		20000		10000		25000		20000		10000	

Dimensional Drawings

Optium F1

Overall and Mounting Dimensions

3P

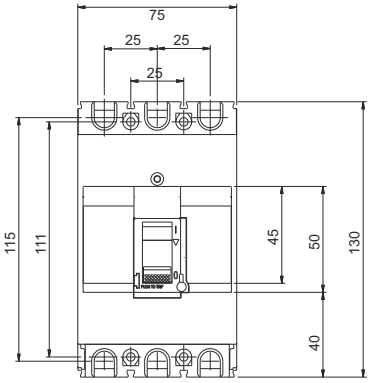

4P

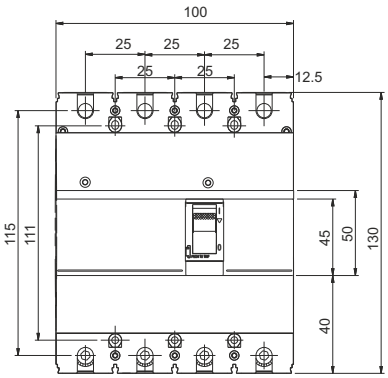

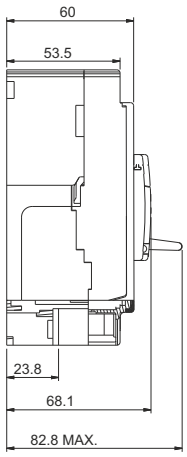

Dimensions with spreader Terminals

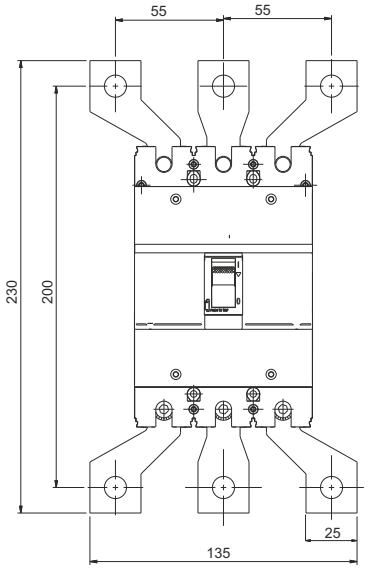

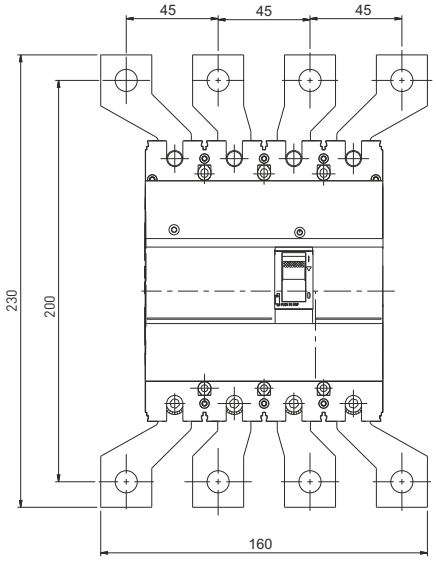

Rating	Spreader Thickness
125A	2.4mm

Dimensions with Rotary Handle-Direct

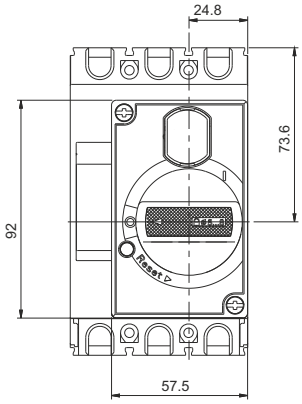

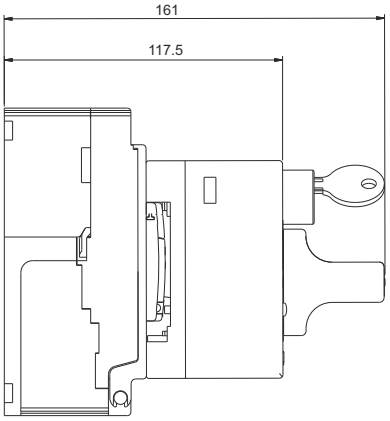

Dimensions with Rotary Handle-Vari-Depth

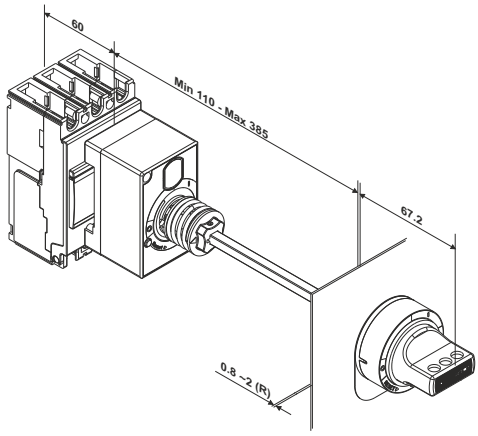

Dimensional Drawings

Optium F2

Overall and Mounting Dimensions

3P

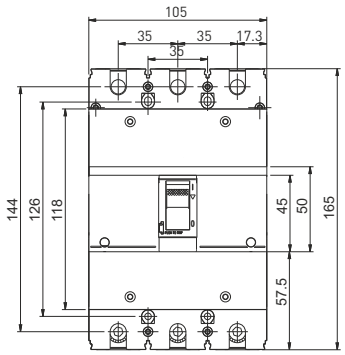

4P

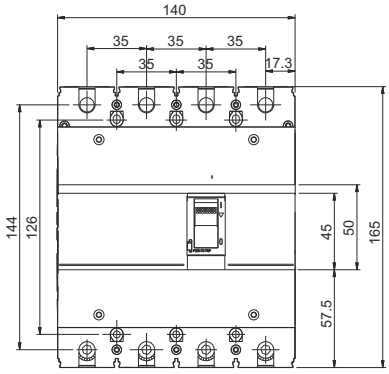

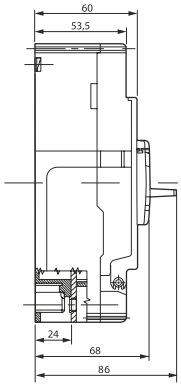

Dimensions with spreader Terminals

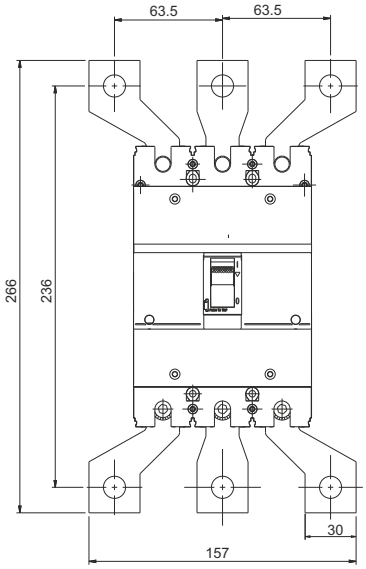

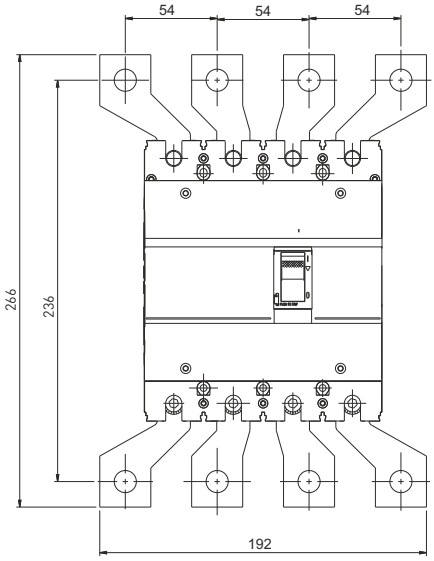

Rating	Spreader Thickness
250A	3.4mm

Dimensions with Rotary Handle-Direct

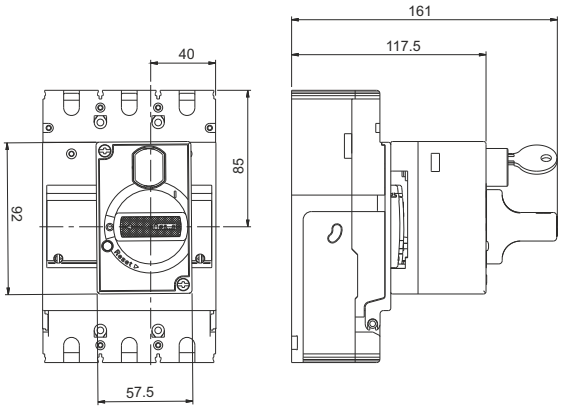

Dimensions with Rotary Handle-Vari-Depth

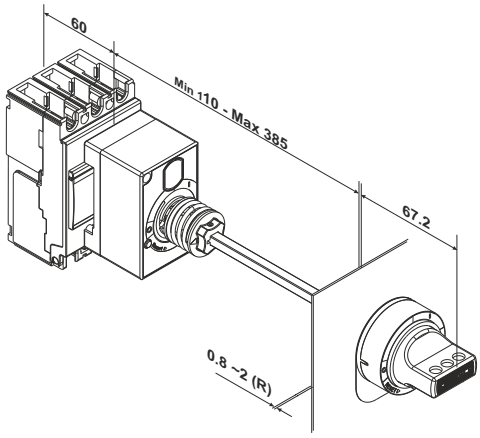

Dimensional Drawings

Optium F3

Overall and Mounting Dimensions

3P

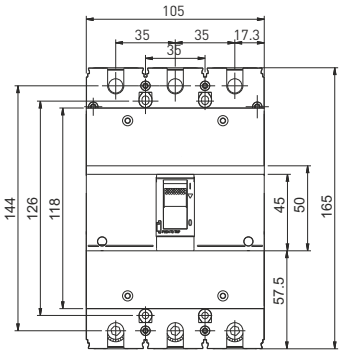

4P

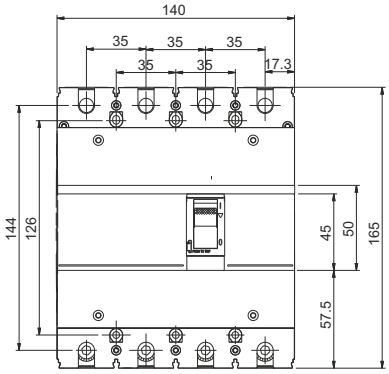

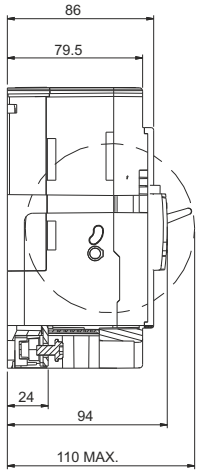

Dimensions with spreader Terminals

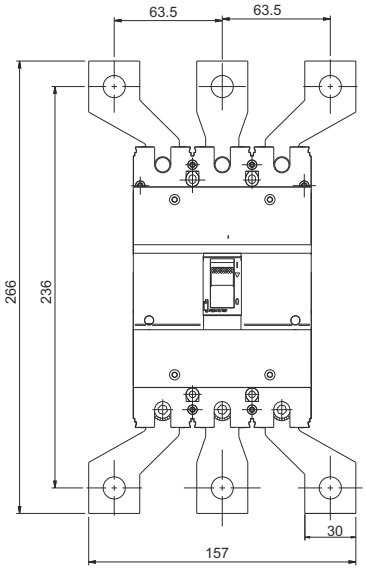

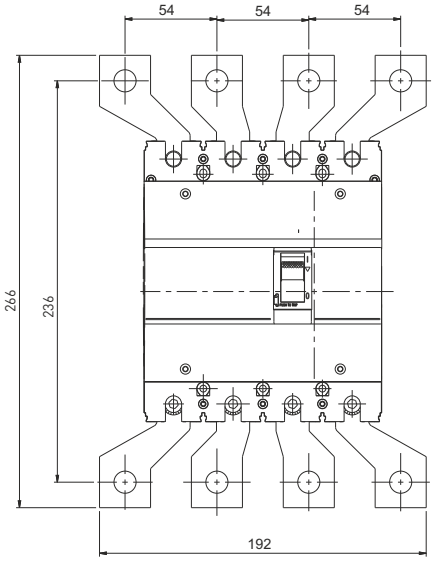

Rating	Spreader Thickness
250A	3.4mm

Dimensions with Rotary Handle-Direct

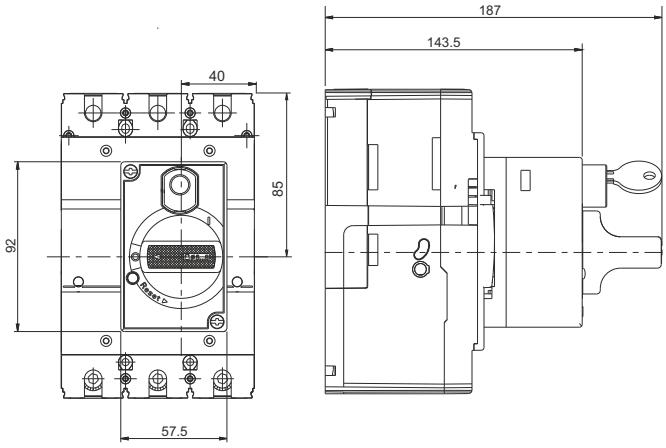

Dimensions with Rotary Handle-Vari-Depth

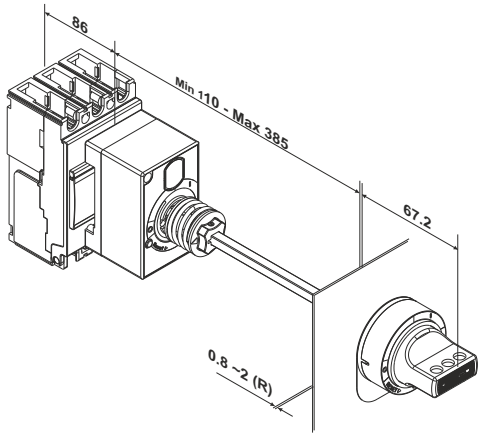

Dimensional Drawings

Optium F4

Overall and Mounting Dimensions

3P

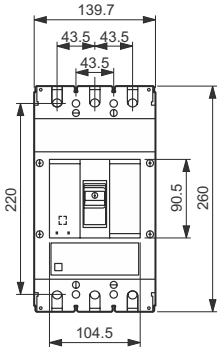

4P

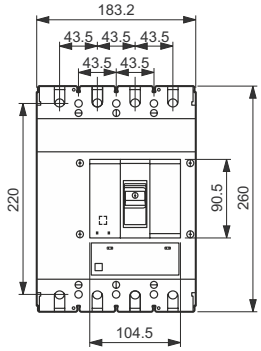

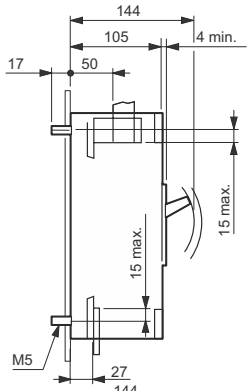

Door Cut

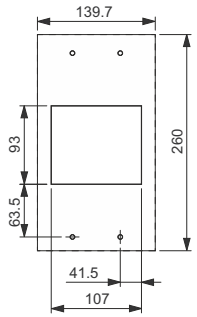

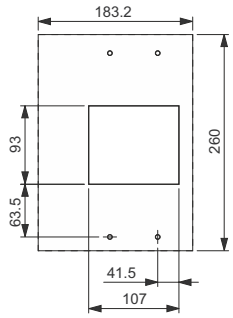

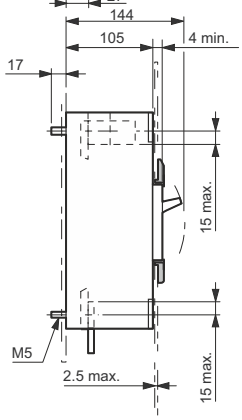

Dimensions with spreader Terminals

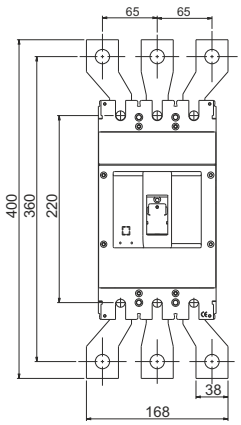

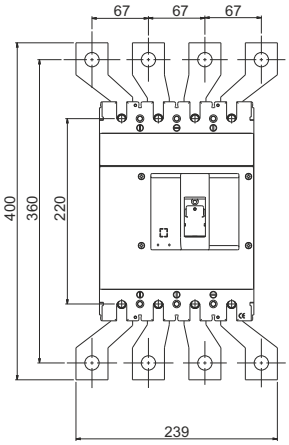

Rating	Spreader Thickness
630A	8mm

Dimensions with Rotary Handle-Direct

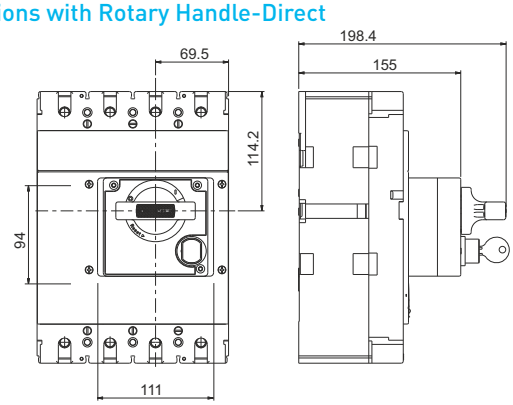

Dimensions with Rotary Handle-Vari-Depth

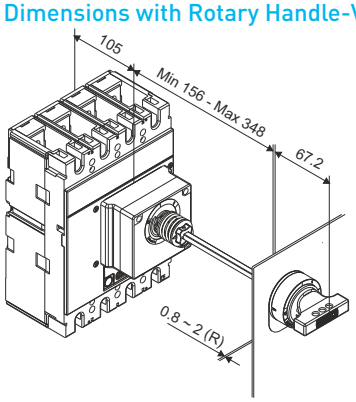

Dimensional Drawings

Optium F5

Overall and Mounting Dimensions

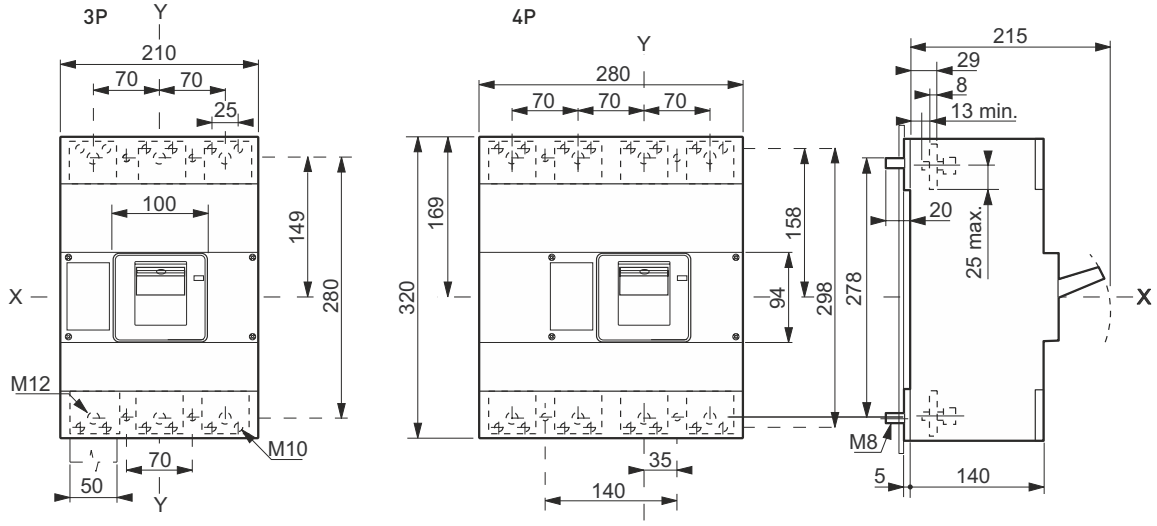

Dimensions with spreader Terminals

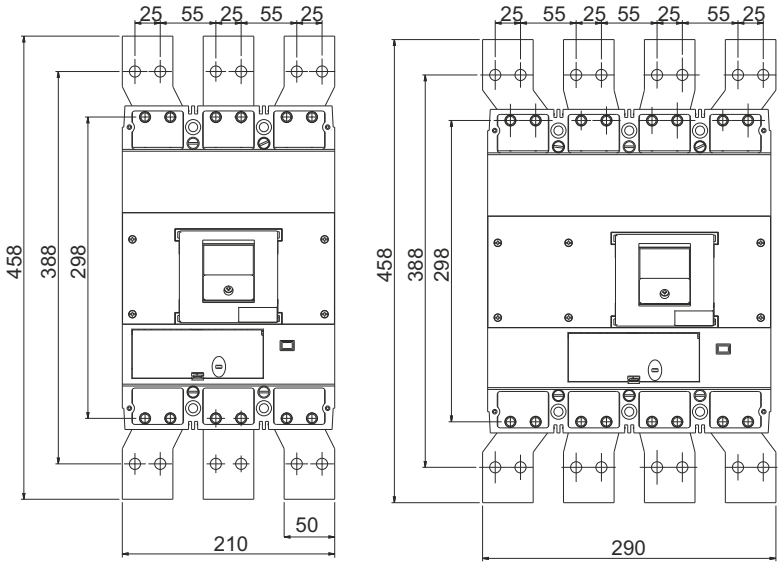

Rating	Spreader Thickness
800/10000A	10mm
1250A	12mm

Dimensions with Rotary Handle-Direct

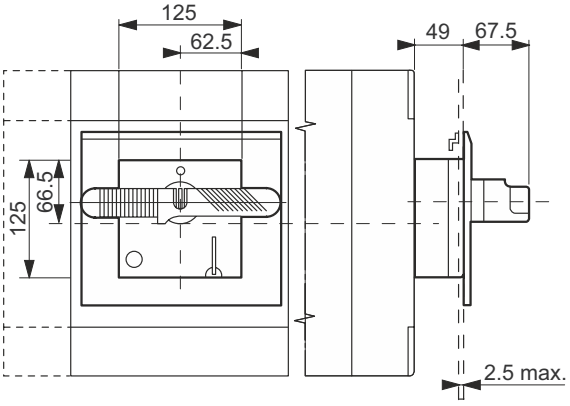

Dimensions with Rotary Handle-Vari-Depth

Mounting with flexible seal

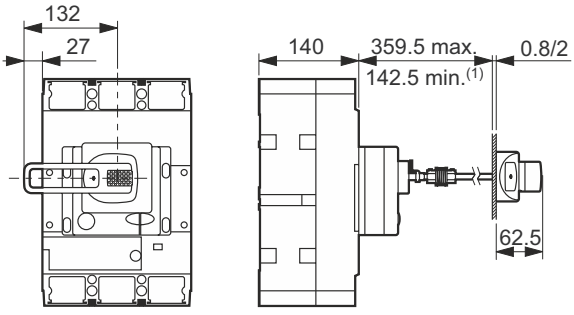

Optium 1.0 (Fixed TM Range)

- Ics =50% Icu as per IEC 60947-II
- Suitable for isolation
- Class II front face
- Fixed Overload & fixed short circuit setting

Frame	Breaking capacity	Rating	3P	4P
F1	10kA	16	830701	830710
F1	10kA	25	830702	830711
F1	10kA	32	830703	830712
F1	10kA	40	830704	830713
F1	10kA	50	830705	830714
F1	10kA	63	830706	830715
F1	10kA	80	830707	830716
F1	10kA	100	830708	830717
F1	10kA	125	830709	830718

Frame	Breaking capacity	Rating	3P	4P
F1	16kA	16	830001	830015
F1	16kA	25	830002	830016
F1	16kA	32	830003	830017
F1	16kA	40	830004	830018
F1	16kA	50	830005	830019
F1	16kA	63	830006	830020
F1	16kA	80	830007	830021
F1	16kA	100	830008	830022
F1	16kA	125	830009	830023

Frame	Breaking capacity	Rating	3P	4P
F1	25kA	16	830031	830045
F1	25kA	25	830032	830046
F1	25kA	32	830033	830047
F1	25kA	40	830034	830048
F1	25kA	50	830035	830049
F1	25kA	63	830036	830050
F1	25kA	80	830037	830051
F1	25kA	100	830038	830052
F1	25kA	125	830039	830053

Frame	Breaking capacity	Rating	3P	4P
F1	36kA	16	830061	830075
F1	36kA	25	830062	830076
F1	36kA	32	830063	830077
F1	36kA	40	830064	830078
F1	36kA	50	830065	830079
F1	36kA	63	830066	830080
F1	36kA	80	830067	830081
F1	36kA	100	830068	830082
F1	36kA	125	830069	830083

Frame	Breaking capacity	Rating	3P	4P
F3	50kA	16	830125	830145
F3	50kA	25	830126	830146
F3	50kA	32	830127	830147
F3	50kA	40	830128	830148
F3	50kA	50	830129	830149
F3	50kA	63	830130	830150
F3	50kA	80	830131	830151
F3	50kA	100	830132	830152
F3	50kA	125	830133	830153

Frame	Breaking capacity	Rating	3P	4P
F2	16kA	160	830090	830095
F2	16kA	200	830091	830096
F2	16kA	250	830092	830097
F2	25kA	160	830100	830105
F2	25kA	200	830101	830106
F2	25kA	250	830102	830107
F2	36kA	160	830110	830115
F2	36kA	200	830111	830116
F2	36kA	250	830112	830117

Frame	Breaking capacity	Rating	3P	4P
F3	50kA	160	830134	830154
F3	50kA	200	830135	830155
F3	50kA	250	830136	830156

Frame	Breaking capacity	Rating	3P	4P
F4	36kA	315	830165	830175
F4	36kA	400	830166	830176
F4	36kA	500	830167	830177
F4	36kA	630	830168	830178

Frame	Breaking capacity	Rating	3P	4P
F4	50kA	315	830185	830195
F4	50kA	400	830186	830196
F4	50kA	500	830187	830197
F4	50kA	630	830188	830198

Frame	Breaking capacity	Rating	3P	4P
F5	50kA	800	830200	830201

Optium 1.1 (Fixed TM Range)

- Ics = 100% Icu as per IEC 60947-II
- Suitable for isolation
- Class II front face
- Fixed Overload & fixed short circuit setting

NEW

Frame	Breaking capacity	Rating	3P	4P
F1	16kA	32	840003	840017
F1	16kA	40	840004	840018
F1	16kA	63	840006	840020
F1	16kA	80	840007	840021
F1	16kA	100	840008	840022
F1	16kA	125	840009	840023
F1	25kA	32	840033	840047
F1	25kA	40	840034	840048
F1	25kA	63	840036	840050
F1	25kA	80	840037	840051
F1	25kA	100	840038	840052
F1	25kA	125	840039	840053
F2	16kA	160	840090	840095
F2	16kA	200	840091	840096
F2	16kA	250	840092	840097
F2	25kA	160	840100	840105
F2	25kA	200	840101	840106
F2	25kA	250	840102	840107

Optium 2.0 (Adjustable Thermal Setting)

- Conforms to IEC 60947-II
- Suitable for isolation
- Ics = 100% Icu
- Adjustable Overload Setting Ir = (0.8 to 1.0)xIn
- Class II front face
- Short Circuit setting fixed

Frame	Breaking capacity	Rating	3P	4P
F1	16kA	25	830222	830236
F1	16kA	32	830223	830237
F1	16kA	40	830224	830238
F1	16kA	50	830225	830239
F1	16kA	63	830226	830240
F1	16kA	80	830227	830241
F1	16kA	100	830228	830242
F1	16kA	125	830229	830243

Frame	Breaking capacity	Rating	3P	4P
F1	25kA	25	830252	830266
F1	25kA	32	830253	830267
F1	25kA	40	830254	830268
F1	25kA	50	830255	830269
F1	25kA	63	830256	830270
F1	25kA	80	830257	830271
F1	25kA	100	830258	830272
F1	25kA	125	830259	830273

Frame	Breaking capacity	Rating	3P	4P
F2	16kA	160	830280	830285
F2	16kA	200	830281	830286
F2	16kA	250	830282	830287
F2	25kA	160	830290	830295
F2	25kA	200	830291	830296
F2	25kA	250	830292	830297

Optium 2.0 (Adjustable TM Range)

- Ics =100% Icu as per IEC 60947-II
- Adjustable Overload Setting Ir =(0.8 to 1.0)xIn
- Class II front face
- Adjustable Short Circuit Setting Isd =(5 -10)xIn
- Suitable for isolation

Frame	Breaking capacity	Rating	3P	4P
F3	36kA	16	830305	830325
F3	36kA	25	830306	830326
F3	36kA	32	830307	830327
F3	36kA	40	830308	830328
F3	36kA	50	830309	830329
F3	36kA	63	830310	830330
F3	36kA	80	830311	830331
F3	36kA	100	830312	830332
F3	36kA	125	830313	830333

Frame	Breaking capacity	Rating	3P	4P
F3	50kA	16	830345	830365
F3	50kA	25	830346	830366
F3	50kA	32	830347	830367
F3	50kA	40	830348	830368
F3	50kA	50	830349	830369
F3	50kA	63	830350	830370
F3	50kA	80	830351	830371
F3	50kA	100	830352	830372
F3	50kA	125	830353	830373

Frame	Breaking capacity	Rating	3P	4P
F3	36kA	160	830314	830334
F3	36kA	200	830315	830335
F3	36kA	250	830316	830336

Frame	Breaking capacity	Rating	3P	4P
F3	50kA	160	830354	830374
F3	50kA	200	830355	830375
F3	50kA	250	830356	830376

Frame	Breaking capacity	Rating	3P	4P
F4	25kA	315	830385	830387
F4	25kA	400	830386	830388
F4	36kA	315	830390	830395
F4	36kA	400	830391	830396
F4	36kA	500	830392	830397
F4	36kA	630	830393	830398
F4	50kA	315	830400	830405
F4	50kA	400	830401	830406
F4	50kA	500	830402	830407
F4	50kA	630	830403	830408

Frame	Breaking capacity	Rating	3P	4P
F5	36kA	800	830410	830413
F5	36kA	1000	830411	830414
F5	36kA	1250	830412	830415
F5	50kA	800	830416	830419
F5	50kA	1000	830417	830420
F5	50kA	1250	830418	830421

Optium 2.1 (Electronic / Micro Processor Range)

- Ics =100% Icu as per IEC 60947-II
- Class II front face
- Suitable for isolation
- Adjustable Overload Setting Ir = 0.4 - 1 x In
- Adjustable Short circuit Curent Setting Isd = 1.5 – 10 x Ir

Frame	Breaking capacity	Rating	3P	4P
F3	36kA	40	830430	830440
F3	36kA	100	830431	830441
F3	36kA	160	830432	830442
F3	36kA	250	830433	830443
F3	50kA	40	830450	830460
F3	50kA	100	830451	830461
F3	50kA	160	830452	830462
F3	50kA	250	830453	830463

Optium 2.1 (Electronic / Micro Processor Range)

- Ics =100% Icu as per IEC 60947-II
- Class II front face
- Suitable for isolation
- Transparent cover for trip unit as standard
- Adjustable Neutral pole protection –N,N/2 & Off for 4 pole MCCB
- Innovative front indication LED's(Ready, Overload pre-alarm & Overload)
- Adjustable Overload Setting Ir = 0.4 - 1 x In ; Tr = 3-30 sec
- Adjustable Short circuit Curent Setting Isd = 1.5 - 10 Ir ; Tsd (I=K) = 0-500 ms; Tsd (I2t=K) = 0-500 ms

Frame	Breaking capacity	Rating	3P	4P
F4	36kA	400	830510	830512
F4	36kA	630	830511	830513
F4	50kA	400	830514	830516
F4	50kA	630	830515	830517

Frame	Breaking capacity	Rating	3P	4P
F5	36kA	800	830540	830542
F5	36kA	1250	830541	830543
F5	50kA	800	830544	830546
F5	50kA	1250	830545	830547

Optium 2.2 (With Electronic / Micro Processor Release)

- Ics =100% Icu as per IEC 60947-II
- Class II front face
- Suitable for isolation
- Adjustable Overload Setting Ir = 0.4 - 1 x In
- Adjustable Short circuit Curent Setting Isd = 1.5 – 10 x Ir
- Ground fault Setting:- Ig = 0.2 - 1 x In

Frame	Breaking capacity	Rating	3P	4P
F3	36kA	40	830470	830480
F3	36kA	100	830471	830481
F3	36kA	160	830472	830482
F3	36kA	250	830473	830483
F3	50kA	40	830490	830500
F3	50kA	100	830491	830501
F3	50kA	160	830492	830502
F3	50kA	250	830493	830503

Optium 2.2 (Electronic / Micro Processor Range)

- Ics =100% Icu as per IEC 60947-II
- Class II front face
- Suitable for isolation
- Adjustable Neutral pole protection –N,N/2 & Off for 4 pole MCCB
- Innovative front indication LED's(Ready, Overload pre-alarm & Overload)
- Adjustable Overload Setting Ir = 0.4 - 1 x In ; Tr = 3-30 sec
- Adjustable Short circuit Curent Setting Isd = 1.5 - 10 Ir ; Tsd (I=K) = 0-500 ms; Tsd (I2t=K) = 0-500 ms
- Ground fault Setting:- Ig = 0.2 - 1 x In ; Tg = 0.1 - 1 s

Frame	Breaking capacity	Rating	3P	4P
F4	36kA	400	830520	830522
F4	36kA	630	830521	830523
F4	50kA	400	830524	830526
F4	50kA	630	830525	830527

Frame	Breaking capacity	Rating	3P	4P
F5	36kA	800	830550	830552
F5	36kA	1250	830551	830553
F5	50kA	800	830554	830556
F5	50kA	1250	830555	830557

Optium Accessories

Product	Frame	Cat Ref.
Auxiliary Contact	F1 F2 F3	830691
Auxiliary Contact	F4-F5	830693
Alarm Contact	F1 F2 F3	830692
Alarm Contact	F4-F5	830693
Auxiliary Contact /Alarm Contact	F1 F2 F3	830694

Product	Frame	Cat Ref.
"Shunt trip 24 V AC/DC"	F1 F2 F3	830602
"Shunt trip 110 V AC/DC"	F1 F2 F3	830603
"Shunt trip 230 V AC/DC"	F1 F2 F3	830604
"Shunt trip 415 V AC/DC"	F1 F2 F3	830605
"Shunt trip 24 V AC/DC"	F4 F5	830642
"Shunt trip 110 V AC/DC"	F4 F5	830643
"Shunt trip 230 V AC/DC"	F4 F5	830644
"Shunt trip 415 V AC/DC"	F4 F5	830645

Product	Frame	Cat Ref.
"Undervoltage 24 V DC"	F1 F2 F3	830606
"Undervoltage 110V AC"	F1 F2 F3	830607
"Undervoltage 230V AC"	F1 F2 F3	830608
"Undervoltage 415V AC"	F1 F2 F3	830609
"Undervoltage 24 V DC"	F4 F5	830646
"Undervoltage 110V AC"	F4 F5	830647
"Undervoltage 230V AC"	F4 F5	830648
"Undervoltage 415V AC"	F4 F5	830649

Optium Accessories

Product	Frame	Cat Ref.
Rotary Handle Direct	F1	830611
Rotary Handle vary-Depth	F1	830612
Rotary Handle Direct	F2 F3	830626
Rotary Handle vary-Depth	F2 F3	830627
Rotary Handle Direct	F4	830651
Rotary Handle vary-Depth	F4	830652
Rotary Handle Direct	F5	830671
Rotary Handle vary-Depth	F5	830672

Product	Frame	Cat Ref.
Ronis lock Direct RH	F1 F2 F3	830613
Ronis lock Vary-Depth RH	F1 F2 F3	830614
Ronis lock Vary-Depth RH	F4	830653
Ronis lock Vary-Depth RH	F5	830673

Product	Frame	Cat Ref.
Padlock Off position	F1 F2 F3	830615
Padlock Off position	F4	830654
Padlock Off position	F5	830674

Product	Frame	Cat Ref.
Phase insulators 3P	F1 F2	830616
Phase insulators 3P	F3	830628
Phase insulators 3P	F4	830655
Phase insulators 3P	F5	830675
Phase insulators 4P	F1 F2	830617
Phase insulators 4P	F3	830629
Phase insulators 4P	F4	830656
Phase insulators 4P	F5	830676

Optium Accessories

Product	Frame	Cat Ref.
Terminal cover 3P	F4	830657
Terminal cover 3P	F5	830677
Terminal cover 4P	F4	830658
Terminal cover 4P	F5	830678
Terminal shield 3P	F5	830679
Terminal shield 4P	F5	830680

Product	Frame	Cat Ref.
Spreaders 3P	F1	830618
Spreaders 4P	F1	830619
Spreaders 3P	F2 F3	830632
Spreaders 4P	F2 F3	830633
Spreaders 3P	F4	830659
Spreaders 4P	F4	830660
Spreaders 3P 800/1000A	F5	830681
Spreaders 4P 800/1000A	F5	830682
Spreaders 3P 1250A	F5	830685
Spreaders 4P 1250A	F5	830686

Product	Frame	Cat Ref.
Cages 3P upto 50A	F1	830620
Cages 4P upto 50A	F1	830621
Cages 3P 63 to 100A	F1	830622
Cages 4P 63 to 100A	F1	830623
Cages 3P 125A	F1	830624
Cages 4P 125A	F1	830625
Cages 3P	F2	830630
Cages 4P	F2	830631
Cages 3P	F3	830634
Cages 4P	F3	830635
Cages 3P	F4	830661
Cages 4P	F4	830662
Cages 3P	F5	830683
Cages 4P	F5	830684

Notes

Notes

Notes

optium™
ALL THAT YOU NEED

Indoasian's network of channel partners and distributors span 60 countries in Africa, Middle East, Far East, Asia Pacific, Europe and Oceania.

INDOASIAN MAKES SENSE WE SUPPORT

INDOASIAN™ MAKES SENSE

CORPORATE OFFICE:
V. J. Business Towers, A-6, 1st Floor, Sector-125, Noida-201301, U.P., India.
Tel.: +91-0120-3305100 Email: international@indoasian.com Website: www.indoasian.com